CUI DEVICES

SERIES: SJ1-353XN | DESCRIPTION: AUDIO JACK

FEATURES

- low profile design
- switch options include:
  - no switch
  - tip switch
  - tip and ring switch

RoHS

PART NUMBER KEY

SJ1 - 353 X N

- Base Number
- Switch Options
  - 3 = no switch
  - 4 = tip switch
  - 5 = tip and ring switch

SPECIFICATIONS

parameter	conditions/description	min	typ	max	units
rated input voltage			12		Vdc
rated input current				1	A
contact resistance	between terminal and mating plug between terminal in a closed circuit			50 30	mΩ mΩ
insulation resistance	at 500 Vdc	100			MΩ
voltage withstand	for 1 minute			500	Vac
insertion/withdrawal force		0.3		3	kg
operating temperature		-25		85	°C
life			5,000		cycles
flammability rating	UL94V-0				
RoHS	yes				

MECHANICAL DRAWING

units: mm
tolerance:
X.X ±0.30 mm
X.XX ±0.25 mm
X.XXX ±0.20 mm
PCB: ±0.05 mm
unless otherwise specified

DESCRIPTION	MATERIAL	PLATING/COLOR
terminal 1	brass t=0.30	silver
terminal 2	brass t=0.30	silver
terminal 3	brass t=0.30	silver
terminal 4	brass t=0.30	silver
terminal 5	brass t=0.30	silver
springs	stainless steel	
bushing	copper alloy (H59)	nickel
housing	PBT (UL94V-0)	black
cover	PBT (UL94V-0)	black

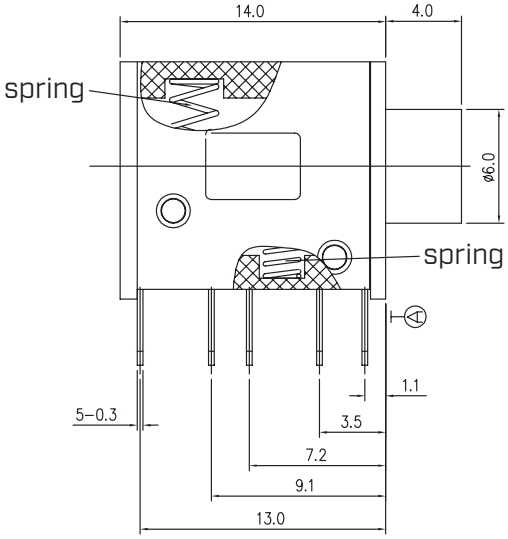

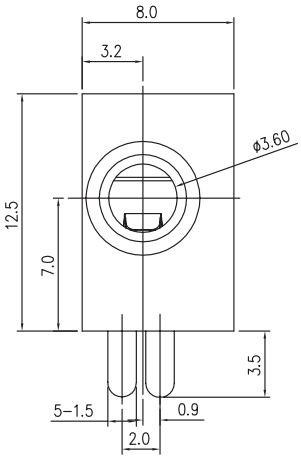

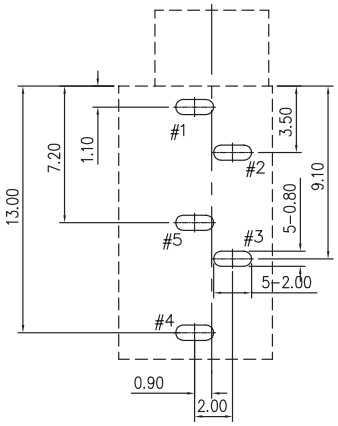

Recommended PCB Layout
Top View

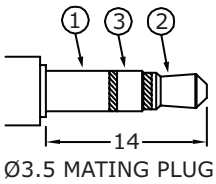

Ø3.5 MATING PLUG

Model No.	SJ1-3533N	SJ1-3534N	SJ1-3535N
Schematic	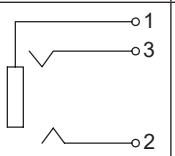	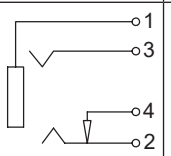	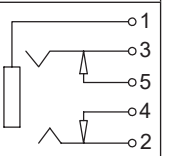
PIN			
1	sleeve	sleeve	sleeve
2	tip	tip	tip
3	ring	ring	ring
4	NP	tip switch	tip switch
5	NP	NP	ring switch

SOLDERABILITY

parameter	conditions/description	min	typ	max	units
wave soldering	for max 5 seconds	255	260	265	°C

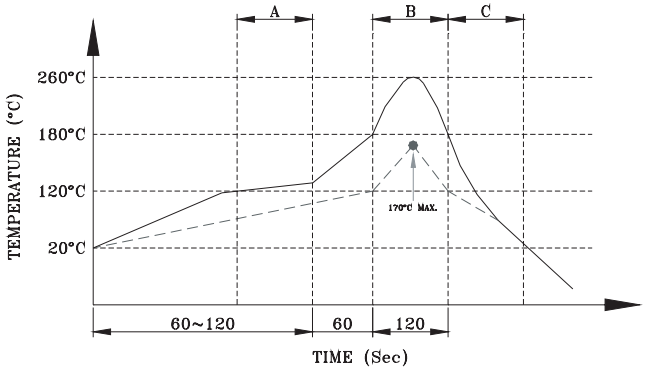

A. Preheating
B. Soldering
C. Cooling

——— Pin Temperature
- - - - Component Temperature

REVISION HISTORY

rev.	description	date
1.0	initial release	12/01/2005
1.01	new template applied	01/27/2012
1.02	brand update	02/10/2020
1.03	product reengineered for improved manufacturability and production yield, see PCN for details	12/21/2022

The revision history provided is for informational purposes only and is believed to be accurate.

CUI Devices offers a one (1) year limited warranty. Complete warranty information is listed on our website.

CUI Devices reserves the right to make changes to the product at any time without notice. Information provided by CUI Devices is believed to be accurate and reliable. However, no responsibility is assumed by CUI Devices for its use, nor for any infringements of patents or other rights of third parties which may result from its use.

CUI Devices products are not authorized or warranted for use as critical components in equipment that requires an extremely high level of reliability. A critical component is any component of a life support device or system whose failure to perform can be reasonably expected to cause the failure of the life support device or system, or to affect its safety or effectiveness.

cuidevices.com