# SERIES: PT01 | DESCRIPTION: ROTARY POTENTIOMETER

## FEATURES

- carbon element
- wide variety of mounting styles
- multiple shaft options
- available with center detent
- linear, logarithmic, and reverse logarithmic tapers

## SPECIFICATIONS

| parameter | conditions/description | min | typ | max | units |
|---|---|---|---|---|---|
| maximum operating voltage | linear and logarithmic (audio) | | | 20<br>50 | Vdc<br>Vac |
| power rating | linear and logarithmic (audio) | | | 0.05 | W |
| taper | linear and logarithmic (audio) | | | | |
| standard resistance range | see Resistance Table | 1.0 | | 1,000 | kΩ |
| standard resistance tolerance | | | ±20 | | % |
| resisdual resistance | 50 Ω or ±1% max | | | | |
| sliding noise | | | | 68 | mV |
| operating temperature | | -10 | | 60 | °C |
| hand soldering | for 3 seconds max | | | 300 | °C |
| RoHS | yes | | | | |

## MECHANICAL

| parameter | conditions/description | min | typ | max | units |
|---|---|---|---|---|---|
| mechanical angle | | 275 | 280 | 285 | ° |
| rotational torque | | 10 | | 150 | gf-cm |
| detent torque | | 20 | | 200 | gf-cm |
| stop strength | | 2 | | | kg-cm |
| rotational life | | | 10,000 | | cycles |
| weight | | | 2.5 | | g |

## PART NUMBER KEY

**PT01 - X X XX X - X XXX**

Base Number

Terminal Configuration:
A = Horizontal/Rear Mount w/Sleeve Bushing
B = Vertical/Side Mount, Bushingless, 10 mm Height
C = Vertical/Side Mount, Bushingless, 6.5 mm Height
D = Horizontal/Rear Mount, Bushingless
E = Horizontal/Rear Mount w/Plastic Plain Bushing
F = Horizontal/Rear Mount w/Metal Threaded Bushing
G = Vertical/Side Mount w/Sleeve Bushing, 6.5 mm Height
H = Vertical/Side Mount w/Sleeve Bushing, 10 mm Height

Detent:
1 = No Detent
2 = Center Detent

Shaft Length:
15 = 15 mm
20 = 20 mm
25 = 25 mm
30 = 30 mm

Shaft Style:
D = D-cut
K1 = Knurled (18 teeth)
K2 = Knurled (40 teeth)

Resistance Taper:
A = Logarithmic
B = Linear
C = Reverse Logarithmic

Resistance (Ω):
102 = 1,000
202 = 2,000
502 = 5,000
103 = 10,000
203 = 20,000
503 = 50,000
104 = 100,000
204 = 200,000
504 = 500,000
105 = 1,000,000

## SCHEMATIC/TAPERS

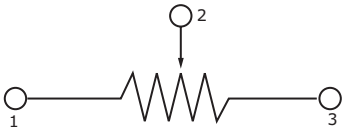


| Resistance Table | |
|---|---|
| Resistance (Ω) | Code |
| 1,000 | 102 |
| 2,000 | 202 |
| 5,000 | 502 |
| 10,000 | 103 |
| 20,000 | 203 |
| 50,000 | 503 |
| 100,000 | 104 |
| 200,000 | 204 |
| 500,000 | 504 |
| 1,000,000 | 105 |

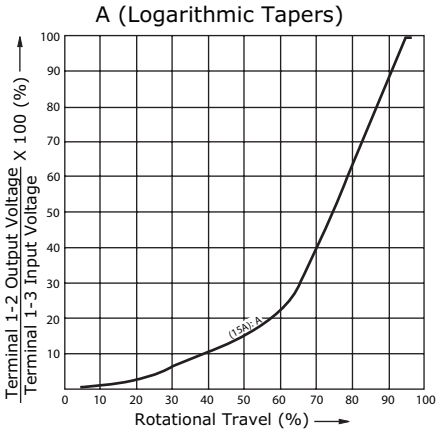


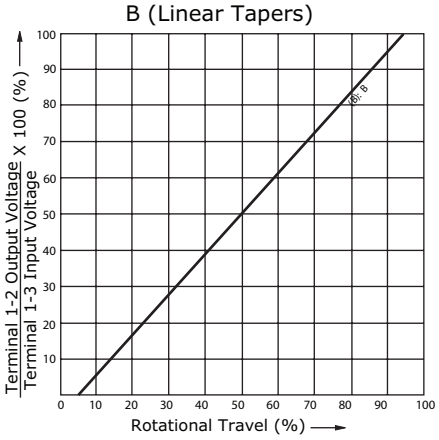


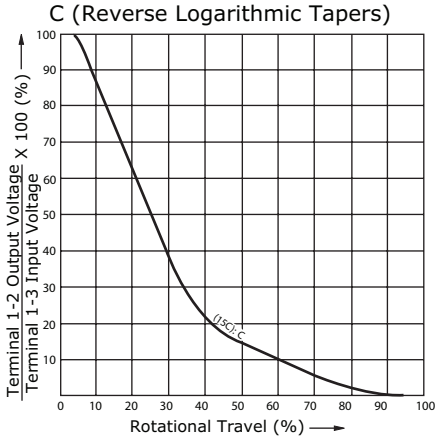

## SHAFT TYPES

units: mm [inch]
tolerance: ±0.3 mm
unless otherwise noted

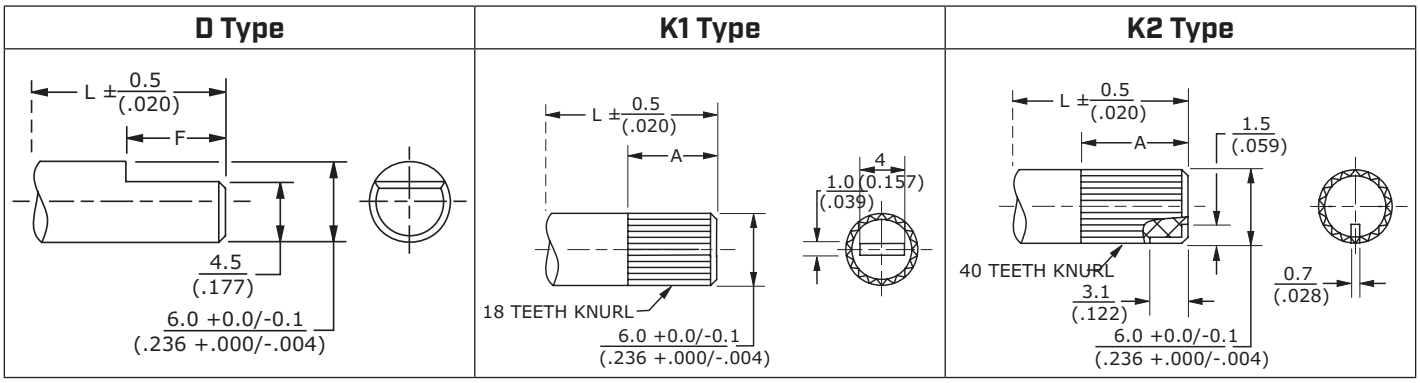


| | 15D | 20D | 25D | 30D |
|---|---|---|---|---|
| L | 15 | 20 | 25 | 30 |
| F | 6 | 7 | 12 | 12 |

| | 15K1 | 20K1 | 25K1 | 30K1 |
|---|---|---|---|---|
| L | 15 | 20 | 25 | 30 |
| A | 6 | 7 | 12 | 12 |

| | 15K2 | 20K2 | 25K2 | 30K2 |
|---|---|---|---|---|
| L | 15 | 20 | 25 | 30 |
| A | 6 | 7 | 12 | 12 |

## MECHANICAL DRAWING (HORIZONTAL/REAR MOUNT W/SLEEVE BUSHING)

units: mm [inch]
tolerance:
X≤10: ±0.3 mm
10<X≤30: ±0.5 mm
30<X≤100: ±1.0 mm
unless otherwise noted

| ITEM | DESCRIPTION | MATERIAL | PLATING/COLOR |
|---|---|---|---|
| A | base | PBT (UL94V-0) | black |
| B | shaft | PC (UL94V-0) | black |
| C | reed | nickel-zinc alloy | |
| D | bracket | iron | bright tin |
| E | terminals | cold rolled steel | dark tin |

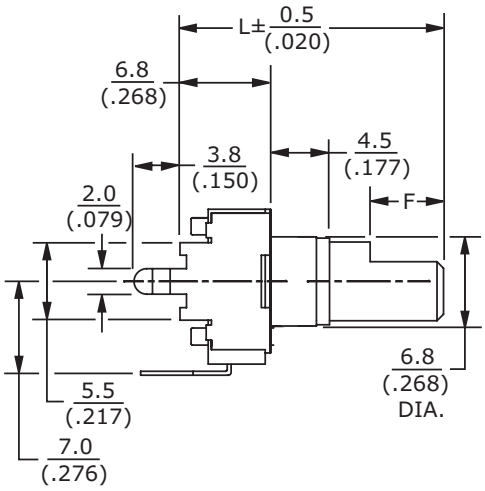


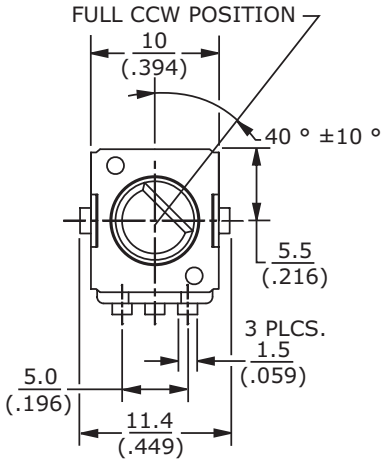


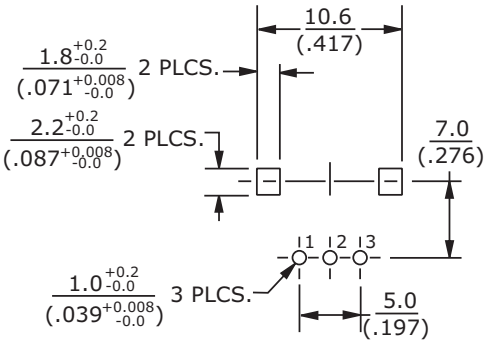


Recommended PCB Layout
Top View

## MECHANICAL DRAWING (VERTICAL/SIDE MOUNT, BUSHINGLESS, 10 MM HEIGHT)

units: mm [inch]
tolerance:
X≤10: ±0.3 mm
10<X≤30: ±0.5 mm
30<X≤100: ±1.0 mm
unless otherwise noted

| ITEM | DESCRIPTION | MATERIAL | PLATING/COLOR |
|---|---|---|---|
| A | base | PBT (UL94V-0) | black |
| B | shaft | PC (UL94V-0) | black |
| C | reed | nickel-zinc alloy | |
| D | bracket | iron | bright tin |
| E | terminals | cold rolled steel | dark tin |

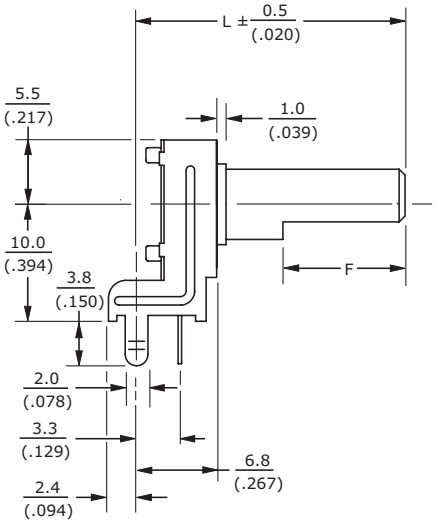


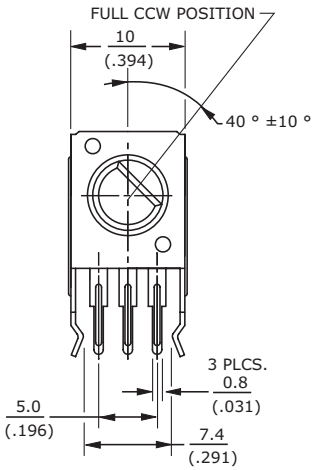


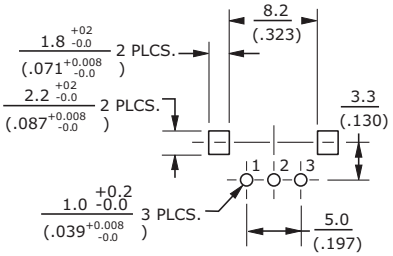


Recommended PCB Layout
Top View

## MECHANICAL DRAWING (VERTICAL/SIDE MOUNT, BUSHINGLESS, 6.5 MM HEIGHT)

units: mm [inch]
tolerance:
X≤10: ±0.3 mm
10<X≤30: ±0.5 mm
30<X≤100: ±1.0 mm
unless otherwise noted

| ITEM | DESCRIPTION | MATERIAL | PLATING/COLOR |
|---|---|---|---|
| A | base | PBT (UL94V-0) | black |
| B | shaft | PC (UL94V-0) | black |
| C | reed | nickel-zinc alloy | |
| D | bracket | iron | bright tin |
| E | terminals | cold rolled steel | dark tin |

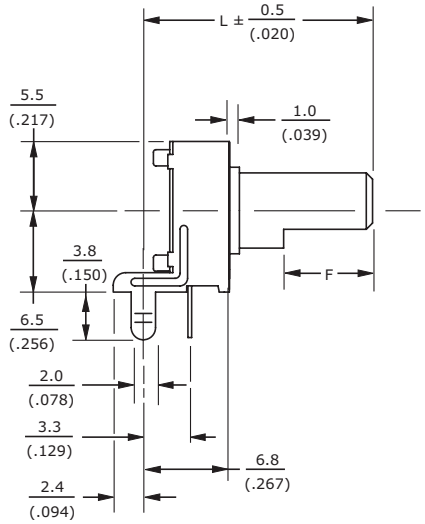


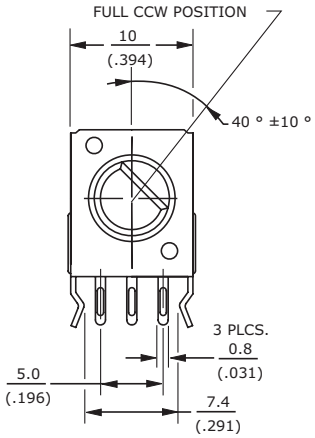


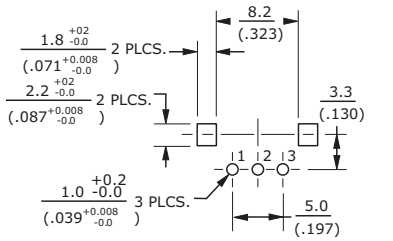


Recommended PCB Layout
Top View

## MECHANICAL DRAWING (HORIZONTAL/REAR MOUNT, BUSHINGLESS)

units: mm [inch]
tolerance:
X≤10: ±0.3 mm
10<X≤30: ±0.5 mm
30<X≤100: ±1.0 mm
unless otherwise noted

| ITEM | DESCRIPTION | MATERIAL | PLATING/COLOR |
|---|---|---|---|
| A | base | PBT (UL94V-0) | black |
| B | shaft | PC (UL94V-0) | black |
| C | reed | nickel-zinc alloy | |
| D | bracket | iron | bright tin |
| E | terminals | cold rolled steel | dark tin |

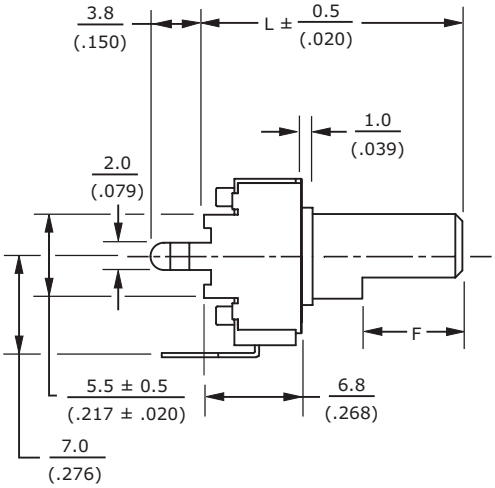


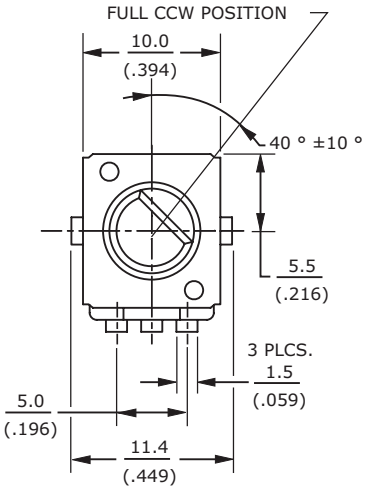


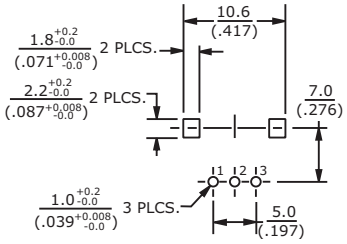


Recommended PCB Layout
Top View

## MECHANICAL DRAWING (HORIZONTAL/REAR MOUNT W/PLASTIC PLAIN BUSHING)

units: mm [inch]
tolerance:
X≤10: ±0.3 mm
10<X≤30: ±0.5 mm
30<X≤100: ±1.0 mm
unless otherwise noted

| ITEM | DESCRIPTION | MATERIAL | PLATING/COLOR |
|---|---|---|---|
| A | base | PBT (UL94V-0) | black |
| B | shaft | PC (UL94V-0) | black |
| C | reed | nickel-zinc alloy | |
| D | bracket | iron | bright tin |
| E | terminals | cold rolled steel | dark tin |

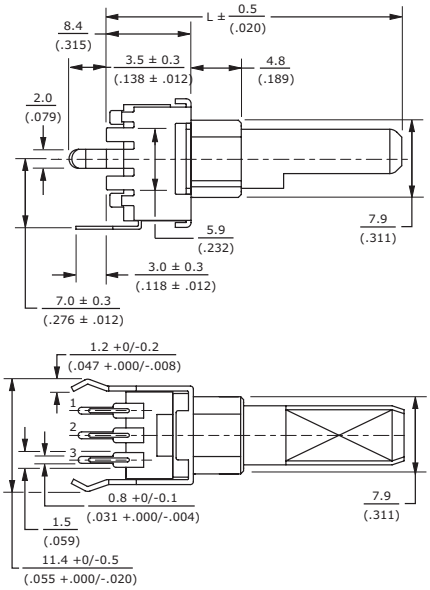


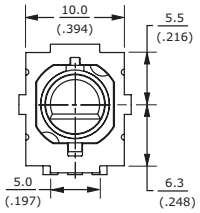


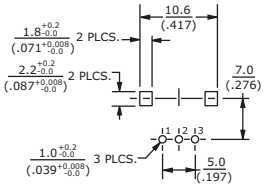


Recommended PCB Layout
Top View

## MECHANICAL DRAWING (HORIZONTAL/REAR MOUNT W/METAL THREADED BUSHING)

units: mm [inch]
tolerance:
X≤10: ±0.3 mm
10<X≤30: ±0.5 mm
30<X≤100: ±1.0 mm
unless otherwise noted

| ITEM | DESCRIPTION | MATERIAL | PLATING/COLOR |
|---|---|---|---|
| A | base | PBT (UL94V-0) | black |
| B | shaft | PC (UL94V-0) | black |
| C | reed | nickel-zinc alloy | |
| D | bracket | iron | bright tin |
| E | terminals | cold rolled steel | dark tin |

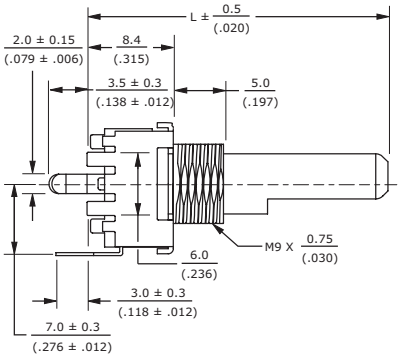


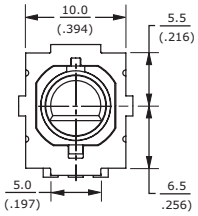


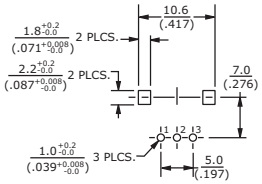


Recommended PCB Layout
Top View

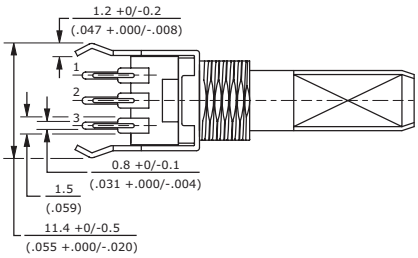


## MECHANICAL DRAWING (VERTICAL/SIDE MNT W/SLEEVE BUSHING, 6.5 MM HEIGHT)

units: mm [inch]
tolerance:
X≤10: ±0.3 mm
10<X≤30: ±0.5 mm
30<X≤100: ±1.0 mm
unless otherwise noted

| ITEM | DESCRIPTION | MATERIAL | PLATING/COLOR |
|---|---|---|---|
| A | base | PBT (UL94V-0) | black |
| B | shaft | PC (UL94V-0) | black |
| C | reed | nickel-zinc alloy | |
| D | bracket | iron | bright tin |
| E | terminals | cold rolled steel | dark tin |

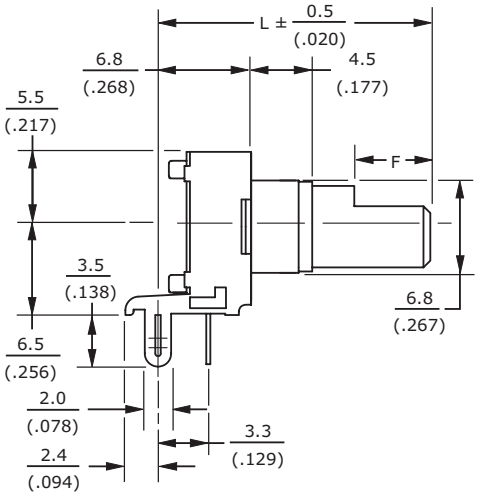


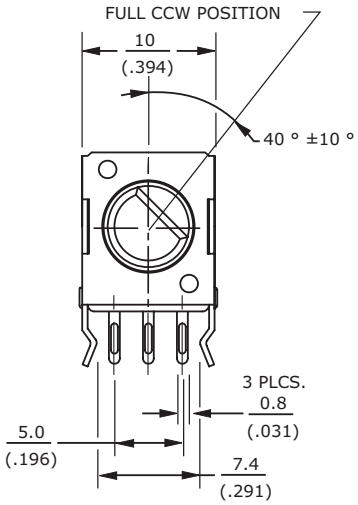


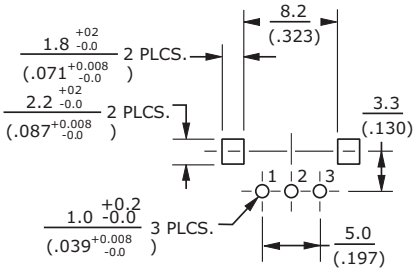


Recommended PCB Layout
Top View

## MECHANICAL DRAWING (VERTICAL/SIDE MNT W/SLEEVE BUSHING, 10 MM HEIGHT)

units: mm [inch]
tolerance:
X≤10: ±0.3 mm
10<X≤30: ±0.5 mm
30<X≤100: ±1.0 mm
unless otherwise noted

| ITEM | DESCRIPTION | MATERIAL | PLATING/COLOR |
|---|---|---|---|
| A | base | PBT (UL94V-0) | black |
| B | shaft | PC (UL94V-0) | black |
| C | reed | nickel-zinc alloy | |
| D | bracket | iron | bright tin |
| E | terminals | cold rolled steel | dark tin |

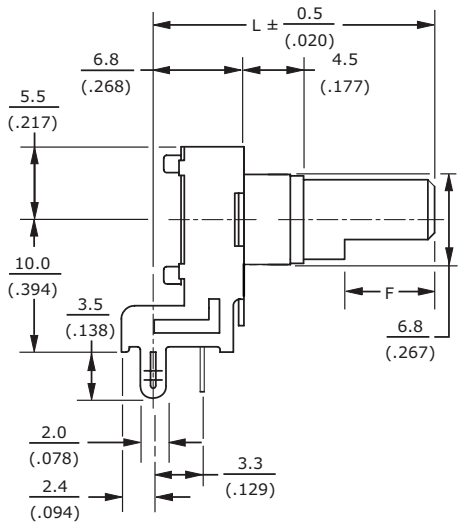


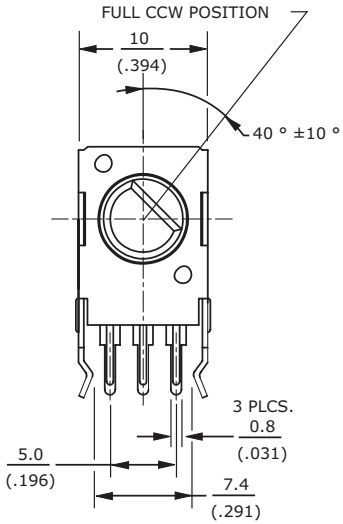


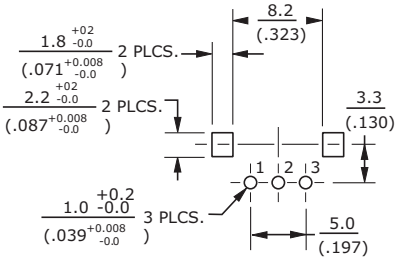


Recommended PCB Layout
Top View

## MOUNTING HARDWARE

units: mm [inch]

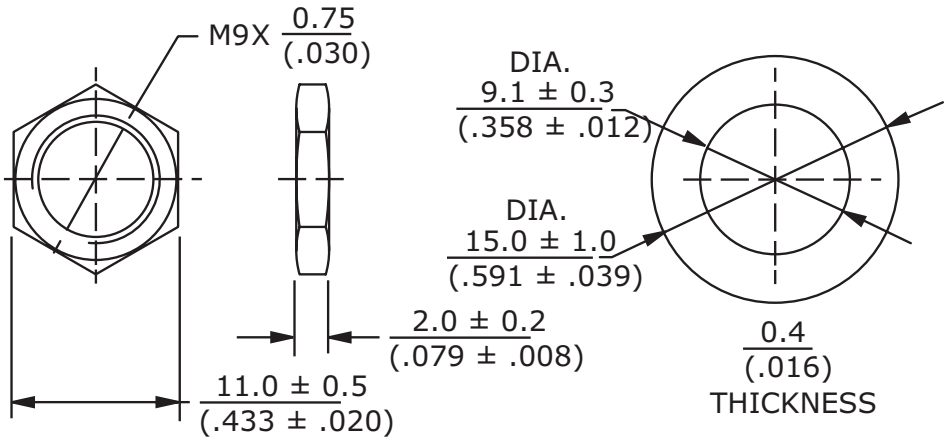


Note: Hex nut and washer supplied with threaded bushing version.

## REVISION HISTORY

| rev. | description | date |
|---|---|---|
| 1.0 | initial release | 12/15/2021 |
| 1.01 | logo, datasheet style update | 08/05/2022 |
| 1.02 | updated taper detail | 01/15/2024 |

The revision history provided is for informational purposes only and is believed to be accurate.

CUI Devices offers a one (1) year limited warranty. Complete warranty information is listed on our website.

CUI Devices reserves the right to make changes to the product at any time without notice. Information provided by CUI Devices is believed to be accurate and reliable. However, no responsibility is assumed by CUI Devices for its use, nor for any infringements of patents or other rights of third parties which may result from its use.

CUI Devices products are not authorized or warranted for use as critical components in equipment that requires an extremely high level of reliability. A critical component is any component of a life support device or system whose failure to perform can be reasonably expected to cause the failure of the life support device or system, or to affect its safety or effectiveness.