CUDEVICES

SERIES: RDS-7229-SMT | **DESCRIPTION:** ROTARY DIP SWITCH

FEATURES

- IP67 rated
- 4, 10, & 16 positions
- surface mount

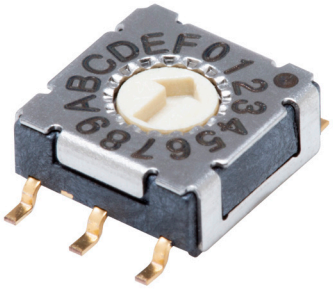

RoHS IP67

SPECIFICATIONS

parameter	conditions/description	min	typ	max	units
rated voltage	switching non-switching			50 50	Vdc Vdc
rated current	switching non-switching			100 100	mA mA
withstanding voltage	for 1 minute		250		Vac
contact resistance				100	mΩ
insulation resistance	at 100 Vdc	100			MΩ
operating torque				200	gf*cm
actuator travel	continuous rotation		360		degrees
operating temperature		-40		85	°C
storage temperature		-40		85	°C
life	at 5 Vdc, 100 mA, 15~20 cycles/minute		10,000		steps
flammability rating	UL94V-0				
RoHS	yes				
IP level	IP67 (IEC 60529:2001)				

PART NUMBER KEY

RDS - XXS - 7229 - X - SMT - XX

- RDS: Base Number
- XX: No. of Positions:
  4 = 4 Positions
  10 = 10 Positions
  16 = 16 Positions
- X: Actuator Style:
  A = Flat Arrow
  C = Flat Cross
  R = Raised Arrow
  S = Raised Slotted
- XX: Packaging:
  "blank" = Tube
  TR = Tape and Reel

MECHANICAL DRAWING (FLAT ARROW ACTUATOR)

units: mm
tolerance: ±0.1 mm
unless otherwise noted

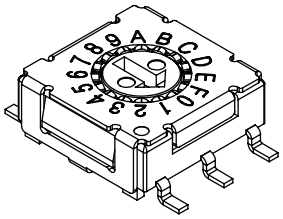

ITEM	DESCRIPTION	MATERIAL	PLATING/COLOR
1	actuator	LCP (UL94V-0)	blue (4 position) gray (10 position) ivory (16 position)
2	housing	LCP (UL94V-0)	dark gray
3	face plate	stainless steel	
4	terminals	copper alloy	gold

4 POSITION

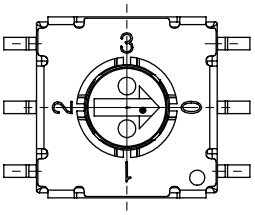

10 POSITION

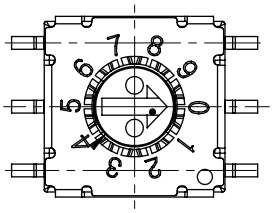

16 POSITION

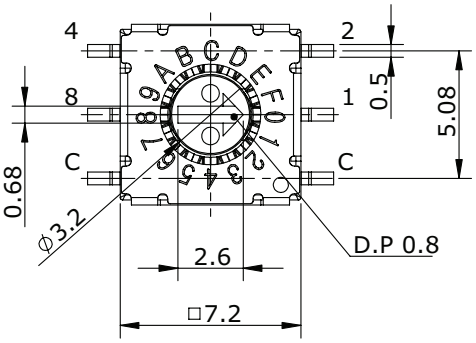

ON ○					
OFF ●			CODE			
TYPE		POS	1	2	4	8
4 STEP*		0	●	●	●	●
		1	○	●	●	●
		2	●	○	●	●
		3	○	○	●	●
10 STEP		4	●	●	○	●
		5	○	●	○	●
		6	●	○	○	●
		7	○	○	○	●
		8	●	●	●	○
		9	○	●	●	○
16 STEP		A	●	○	●	○
		B	○	○	●	○
		C	●	●	○	○
		D	○	●	○	○
		E	●	○	○	○
		F	○	○	○	○

Note: *Terminals 4 and 8 have no function on 4 position model.

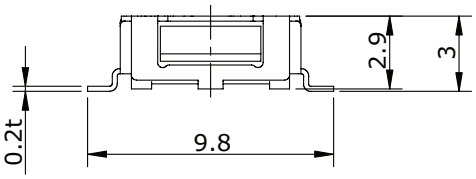

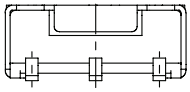

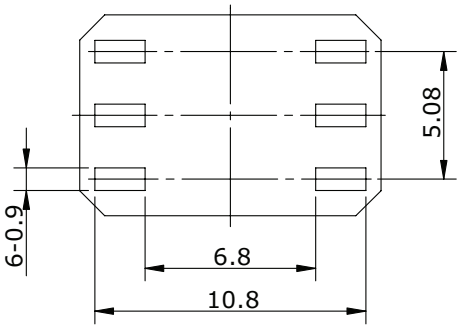

Recommended PCB Layout
Top View

MECHANICAL DRAWING (FLAT CROSS ACTUATOR)

units: mm
tolerance: ±0.1 mm
unless otherwise noted

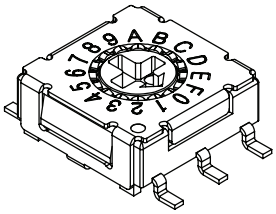

ITEM	DESCRIPTION	MATERIAL	PLATING/COLOR
1	actuator	LCP (UL94V-0)	blue (4 position) gray (10 position) ivory (16 position)
2	housing	LCP (UL94V-0)	dark gray
3	face plate	stainless steel	
4	terminals	copper alloy	gold

4 POSITION

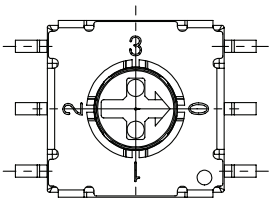

10 POSITION

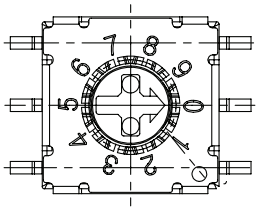

16 POSITION

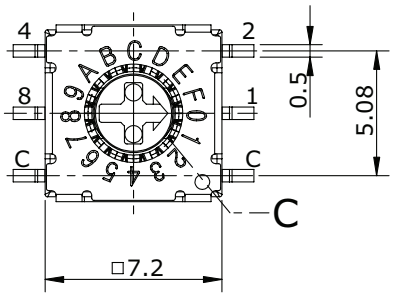

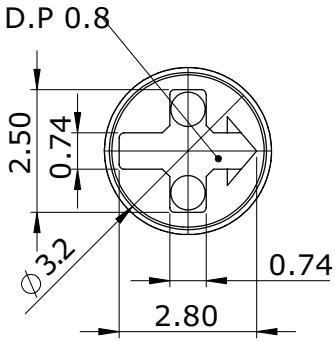

ON ○					
OFF ●			CODE			
TYPE		POS	1	2	4	8
	4 STEP*	0	●	●	●	●
		1	○	●	●	●
		2	●	○	●	●
		3	○	○	●	●
	10 STEP	4	●	●	○	●
		5	○	●	○	●
		6	●	○	○	●
		7	○	○	○	●
		8	●	●	●	○
		9	○	●	●	○
	16 STEP	A	●	○	●	○
		B	○	○	●	○
		C	●	●	○	○
		D	○	●	○	○
		E	●	○	○	○
		F	○	○	○	○

Note: *Terminals 4 and 8 have no function on 4 position model.

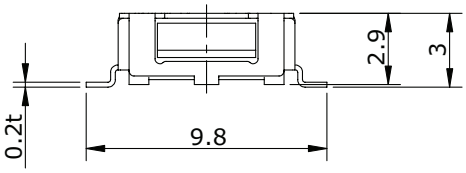

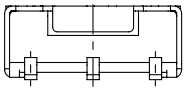

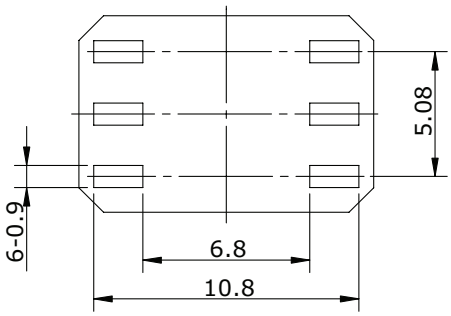

Recommended PCB Layout
Top View

MECHANICAL DRAWING (RAISED ARROW ACTUATOR)

units: mm
tolerance: ±0.1 mm
unless otherwise noted

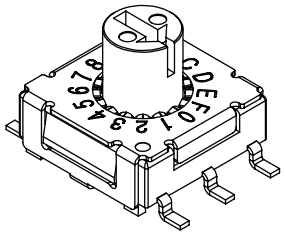

ITEM	DESCRIPTION	MATERIAL	PLATING/COLOR
1	actuator	LCP (UL94V-0)	blue (4 position) gray (10 position) ivory (16 position)
2	housing	LCP (UL94V-0)	dark gray
3	face plate	stainless steel	
4	terminals	copper alloy	gold

4 POSITION

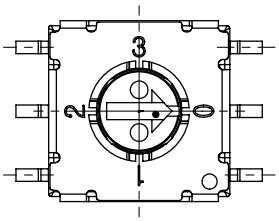

10 POSITION

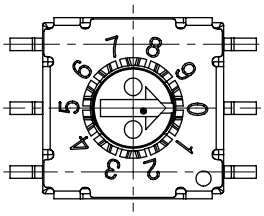

ON ○						
OFF ●				CODE		
TYPE		POS	1	2	4	8
	4 STEP*	0	●	●	●	●
		1	○	●	●	●
		2	●	○	●	●
		3	○	○	●	●
	10 STEP	4	●	●	○	●
		5	○	●	○	●
		6	●	○	○	●
		7	○	○	○	●
		8	●	●	●	○
		9	○	●	●	○
	16 STEP	A	●	○	●	○
		B	○	○	●	○
		C	●	●	○	○
		D	○	●	○	○
		E	●	○	○	○
		F	○	○	○	○

Note: *Terminals 4 and 8 have no function on 4 position model.

16 POSITION

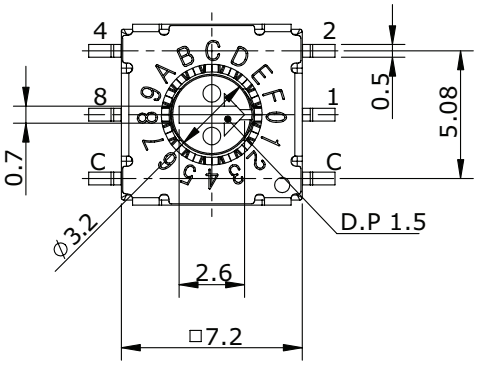

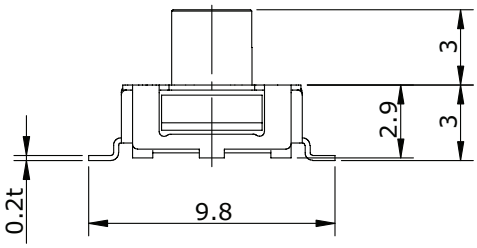

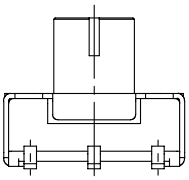

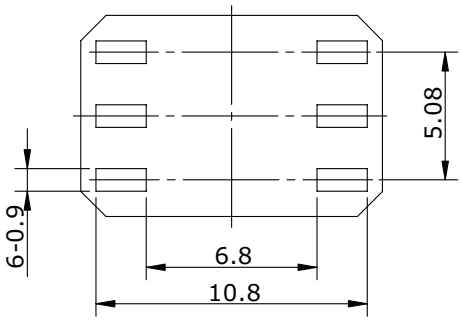

Recommended PCB Layout
Top View

MECHANICAL DRAWING (RAISED SLOTTED ACTUATOR)

units: mm
tolerance: ±0.1 mm
unless otherwise noted

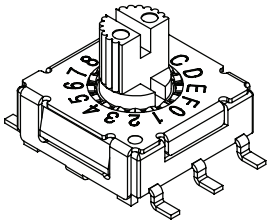

ITEM	DESCRIPTION	MATERIAL	PLATING/COLOR
1	actuator	LCP (UL94V-0)	blue (4 position) gray (10 position) ivory (16 position)
2	housing	LCP (UL94V-0)	dark gray
3	face plate	stainless steel	
4	terminals	copper alloy	gold

4 POSITION

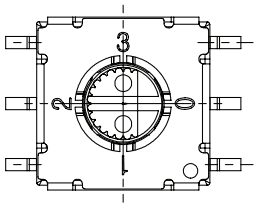

10 POSITION

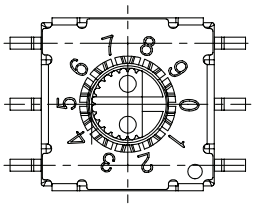

16 POSITION

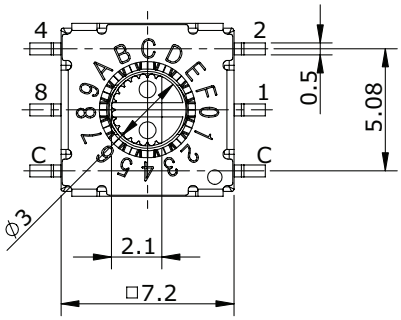

ON ○					
OFF ●			CODE			
TYPE		POS	1	2	4	8
4 STEP*		0	●	●	●	●
		1	○	●	●	●
		2	●	○	●	●
		3	○	○	●	●
10 STEP		4	●	●	○	●
		5	○	●	○	●
		6	●	○	○	●
		7	○	○	○	●
		8	●	●	●	○
		9	○	●	●	○
16 STEP		A	●	○	●	○
		B	○	○	●	○
		C	●	●	○	○
		D	○	●	○	○
		E	●	○	○	○
		F	○	○	○	○

Note: *Terminals 4 and 8 have no function on 4 position model.

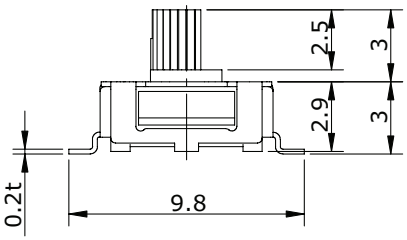

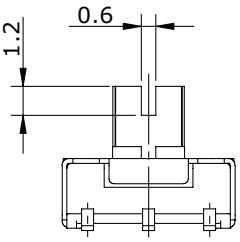

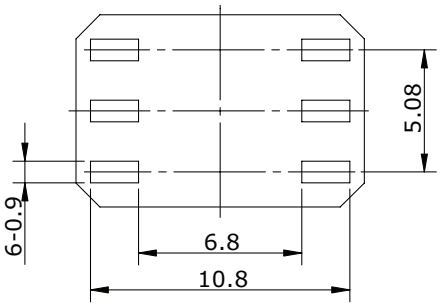

Recommended PCB Layout
Top View

SOLDERABILITY

parameter	conditions/description	min	typ	max	units
hand soldering	for maximum 3 seconds			350	°C
reflow soldering				260	°C

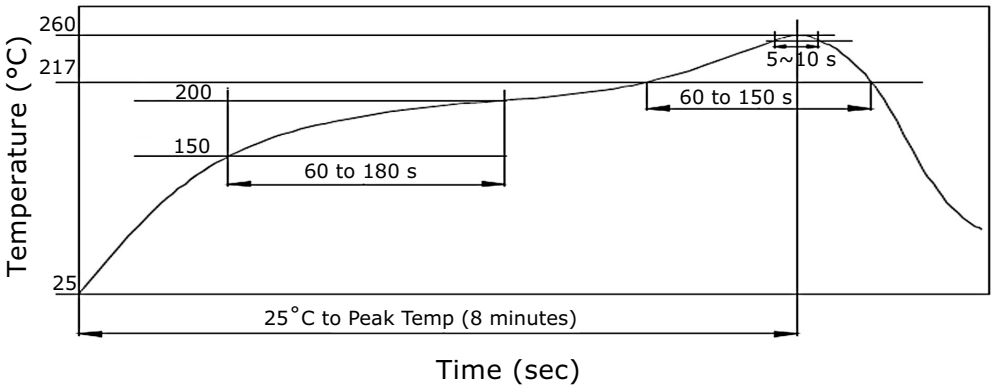

PACKAGING (TUBE)

units: mm

Tube Size: 14.5 x 13.0 x 545 mm
Tube QTY: 70 pcs

FLAT ACTUATOR MODELS

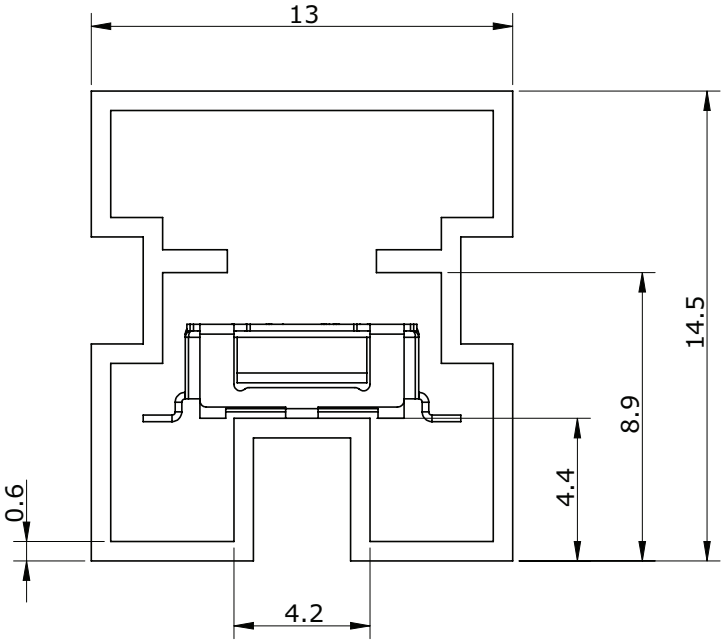

RAISED ACTUATOR MODELS

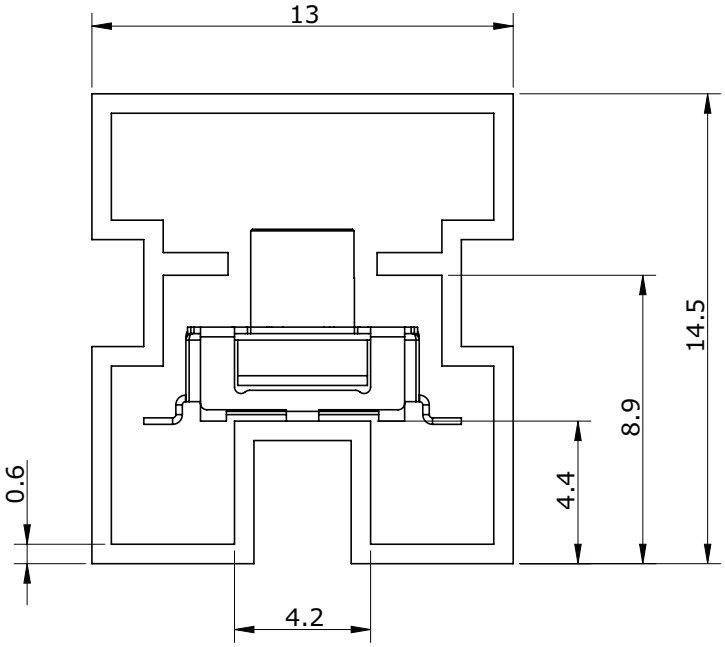

PACKAGING (TAPE & REEL)

units: mm

Reel Size: Ø330 mm
QTY:
Flat actuator models: 1,300 pcs/reel
Raised actuator models: 800 pcs/reel

FLAT ACTUATOR MODELS

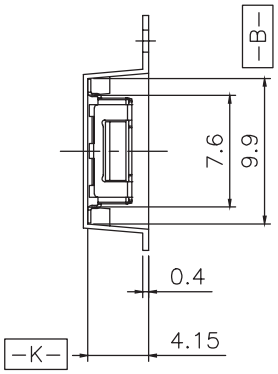

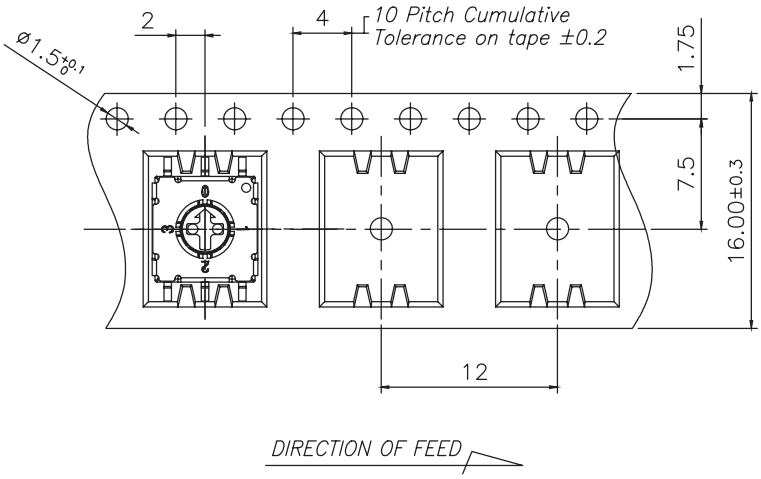

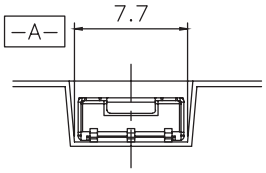

RAISED ACTUATOR MODELS

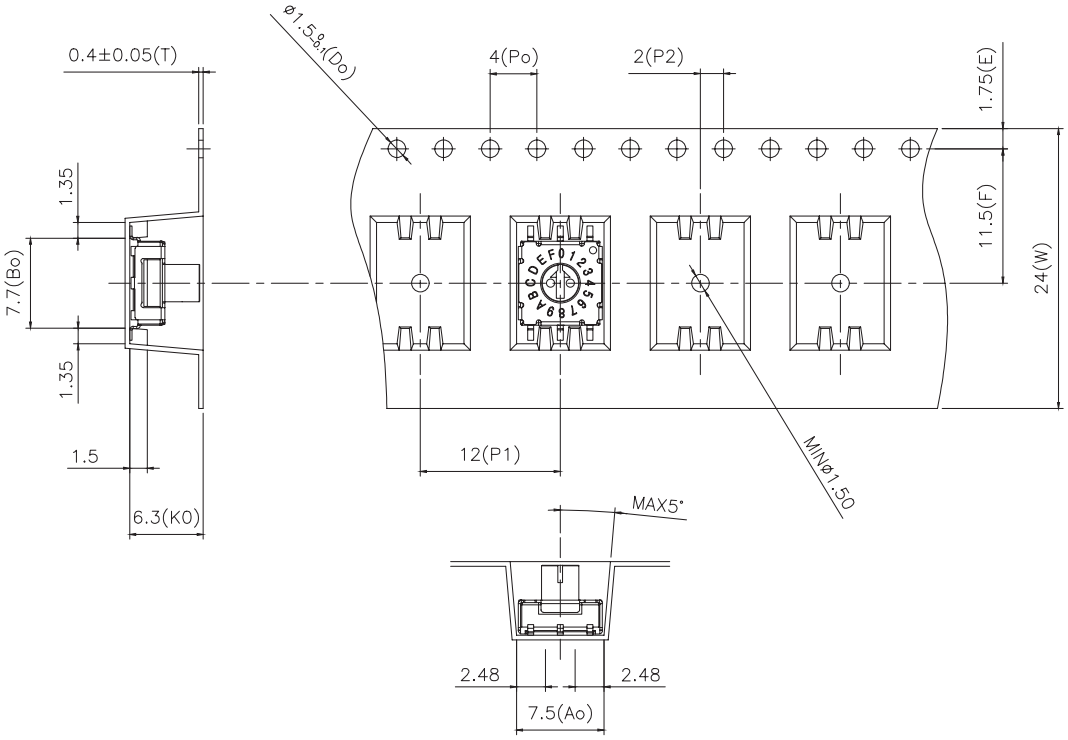

REVISION HISTORY

rev.	description	date
1.0	initial release	12/11/2020
1.01	logo, datasheet style update	08/05/2022

The revision history provided is for informational purposes only and is believed to be accurate.

CUI Devices offers a one (1) year limited warranty. Complete warranty information is listed on our website.

CUI Devices reserves the right to make changes to the product at any time without notice. Information provided by CUI Devices is believed to be accurate and reliable. However, no responsibility is assumed by CUI Devices for its use, nor for any infringements of patents or other rights of third parties which may result from its use.

CUI Devices products are not authorized or warranted for use as critical components in equipment that requires an extremely high level of reliability. A critical component is any component of a life support device or system whose failure to perform can be reasonably expected to cause the failure of the life support device or system, or to affect its safety or effectiveness.