CUDEVICES

SERIES: PTN16 | **DESCRIPTION:** ROTARY POTENTIOMETER

FEATURES

- single and dual section control
- carbon element
- center detent option
- D-cut or knurled shaft options

RoHS

SPECIFICATIONS

parameter	conditions/description	min	typ	max	units
maximum operating voltage				200	Vdc
power rating	at 70°C			0.125	W
taper	linear, logarithmic, and reverse logarithmic				
standard resistance range	see Resistance Table	1.0		1,000	kΩ
standard resistance tolerance			±20		%
residual resistance				±1	%
sliding noise				6	mV
operating temperature		-10		75	°C
hand soldering	for 3 seconds max			260	°C
RoHS	yes				

MECHANICAL

parameter	conditions/description	min	typ	max	units
mechanical angle		295	300	305	°
rotational torque		10		150	gf-cm
detent torque		20		200	gf-cm
stop strength		4			kg-cm
rotational life			10,000		cycles
weight	single section models: weight varies by model	5	7	9	g
	double section models: weight varies by model	6	8	10	g
	switch section models: weight varies by model	6	8	10	g

PART NUMBER KEY

PTN16 - X XXX X XX XX X X

Base Number

Terminal Configuration:
A= Vertical, 12.5 mm terminals
B= Vertical, 18 mm terminals Height
C= Vertical 15 mm solder tabs
D= Horizontal, rear facing solder tabs
E= Horizontal, front facing terminals
F= Horizontal, rear facing terminals

Resistance:
01 = 1 kΩ
02 = 2 kΩ
05 = 5 kΩ
10 = 10 kΩ
20 = 20 kΩ
25 = 25 kΩ
50 = 50 kΩ
100 = 100 kΩ
200 = 200 kΩ
500 = 500 kΩ
11 = 1 MΩ
22 = 2 MΩ

Detent:
1 = No Detent
2 = Center Detent

Shaft Length:
15 = 15 mm
20 = 20 mm
25 = 25 mm
30 = 30 mm

Shaft Style:
D = D-Cut
K1 = Metal knurled 18 tooth

Resistance Taper:
A = Logarithmic
B = Linear
C = Reverse Logarithmic

Number of Sections:
1 = Single
2 = Dual
3 = With Switch

SCHEMATIC/TAPERS

Single

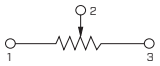

Double

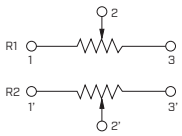

With Switch

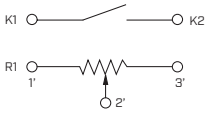

Resistance Table	
Resistance (KΩ)	Code
1	01
2	02
5	05
10	10
20	20
25	25
50	50
100	100
200	200
500	500
1,000	11
2,000	22

A (Logarithmic Tapers)

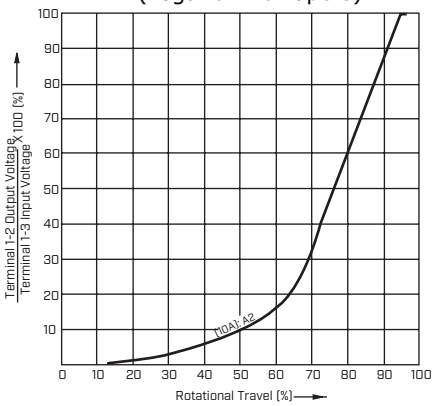

B (Linear Tapers)

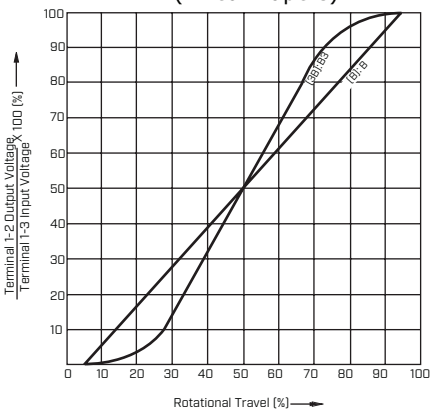

C (Reverse Logarithmic Tapers)

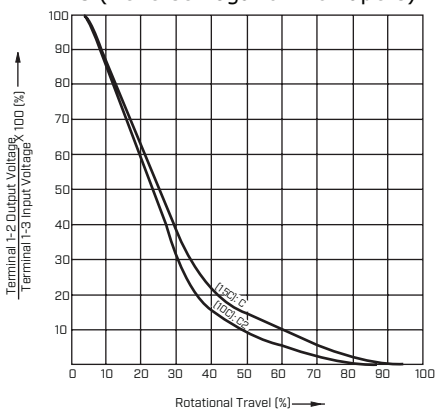

Note: 1. Taper B3 only available on model PTN16-A20115K1B2.
2. Taper C only available on model PTN16-D100115K1C1.

SHAFT TYPES

units: mm
tolerance:
X≤10.00: ±0.30 mm
10.00<X≤30.00: ±0.50 mm
30.00<X≤100.00: ±1.0 mm
unless otherwise noted

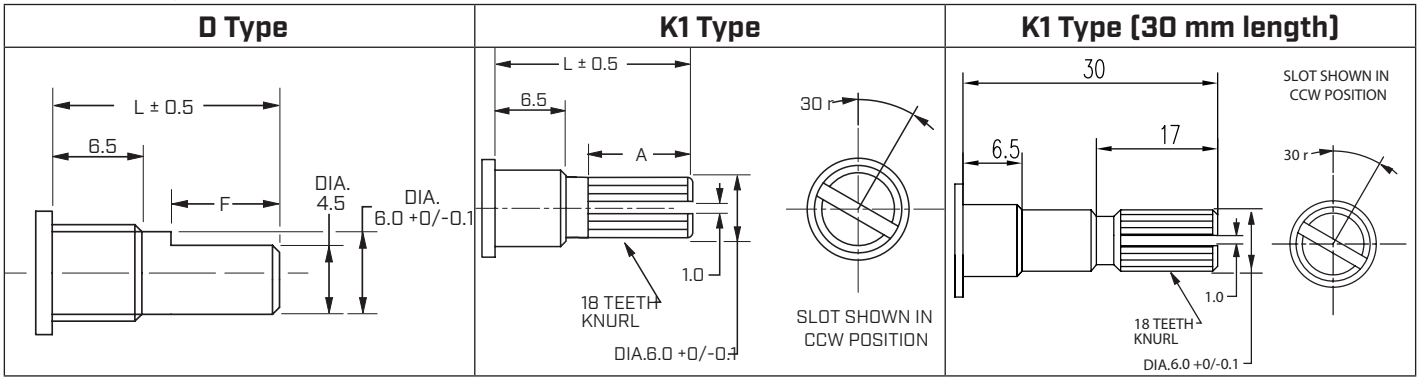

	15D	20D	25D	30D
L	15	20	25	30
F	7	12	12	12

	15K1	20K1	25K1	30K1
L	15	20	25	30
A	6.5	11.5	17	17

MECHANICAL DRAWING (SINGLE SECTION, A TERMINAL CONFIGURATION)

units: mm
tolerance:
X≤10.00: ±0.30 mm
10.00<X≤30.00: ±0.50 mm
30.00<X≤100.00: ±1.0 mm
unless otherwise noted

DESCRIPTION	MATERIAL	PLATING/COLOR
shaft	zinc alloy	
bushing	zinc alloy	
driving plate	POM (UL94HB)	
reed	zinc	cupronickel
carbon plate	FR4 (UL94HB)	
terminals	cold rolled steel	tin
hoop	cold rolled steel	zinc

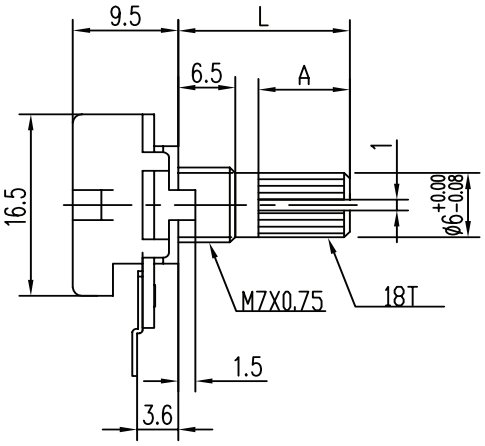

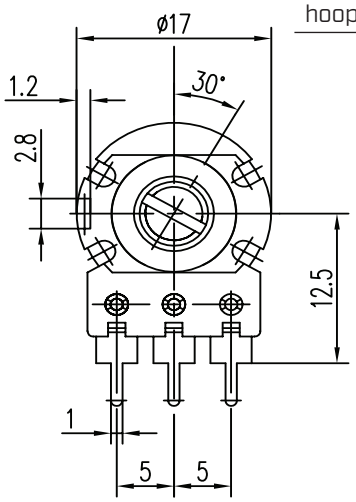

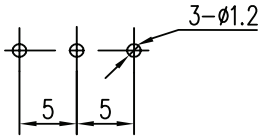

Recommended PCB Layout
Top View

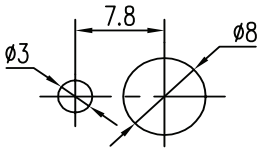

Recommended Panel Cutout
Front View

MECHANICAL DRAWING (SINGLE SECTION, B TERMINAL CONFIGURATION)

units: mm
tolerance:
X≤10.00: ±0.30 mm
10.00<X≤30.00: ±0.50 mm
30.00<X≤100.00: ±1.0 mm
unless otherwise noted

DESCRIPTION	MATERIAL	PLATING/COLOR
shaft	zinc alloy	
bushing	zinc alloy	
driving plate	POM (UL94HB)	
reed	zinc	cupronickel
carbon plate	FR4 (UL94HB)	
terminals	cold rolled steel	tin
hoop	cold rolled steel	zinc

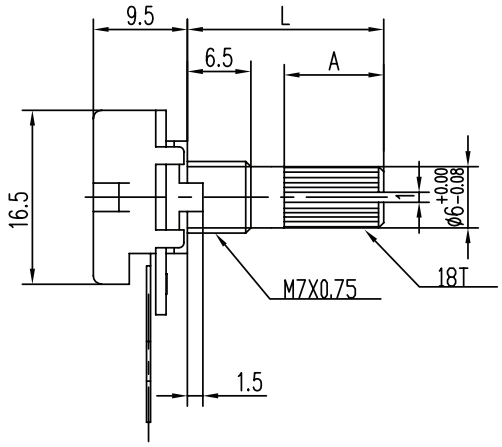

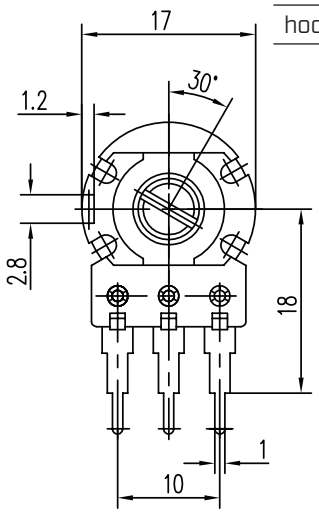

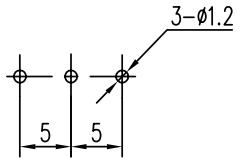

Recommended PCB Layout
Top View

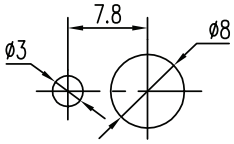

Recommended Panel Cutout
Front View

MECHANICAL DRAWING (SINGLE SECTION, D TERMINAL CONFIGURATION)

units: mm
tolerance:
X≤10.00: ±0.30 mm
10.00<X≤30.00: ±0.50 mm
30.00<X≤100.00: ±1.0 mm
unless otherwise noted

DESCRIPTION	MATERIAL	PLATING/COLOR
shaft	zinc alloy	
bushing	zinc alloy	
driving plate	POM (UL94HB)	
reed	zinc	cupronickel
carbon plate	FR4 (UL94HB)	
terminals	cold rolled steel	tin
hoop	cold rolled steel	zinc

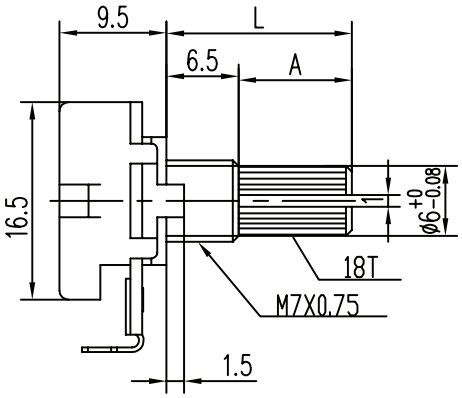

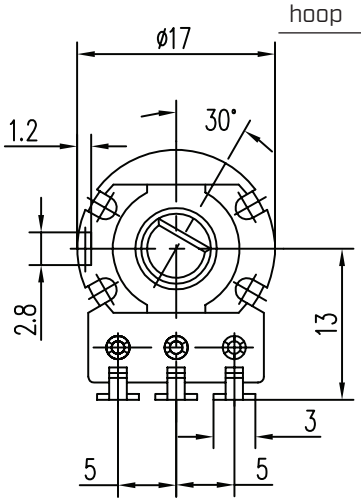

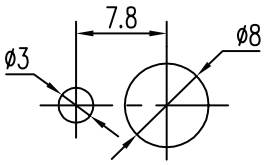

Recommended Panel Cutout
Front View

MECHANICAL DRAWING (SINGLE SECTION, E TERMINAL CONFIGURATION)

units: mm
tolerance:
X≤10.00: ±0.30 mm
10.00<X≤30.00: ±0.50 mm
30.00<X≤100.00: ±1.0 mm
unless otherwise noted

DESCRIPTION	MATERIAL	PLATING/COLOR
shaft	zinc alloy	
bushing	zinc alloy	
driving plate	POM (UL94HB)	
reed	zinc	cupronickel
carbon plate	FR4 (UL94HB)	
terminals	cold rolled steel	tin
hoop	cold rolled steel	zinc

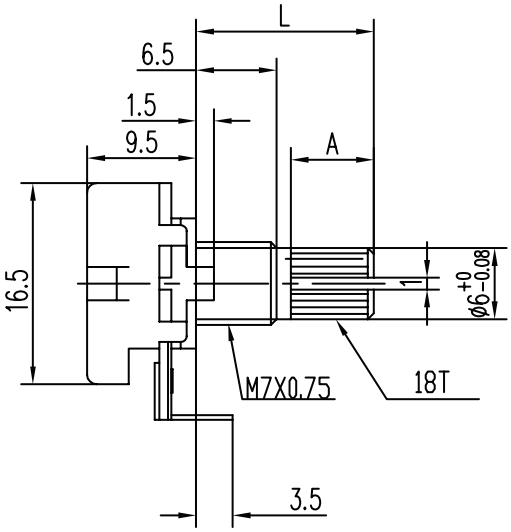

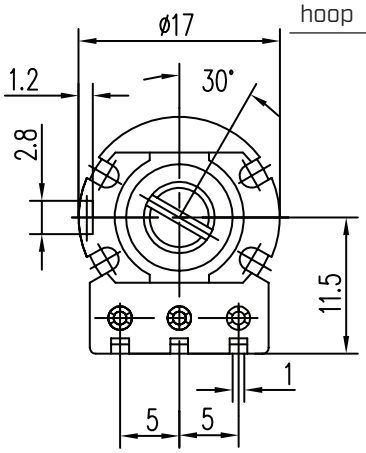

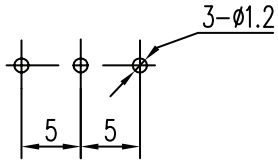

Recommended PCB Layout
Top View

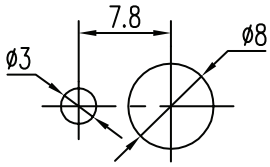

Recommended Panel Cutout
Front View

MECHANICAL DRAWING (SINGLE SECTION, F TERMINAL CONFIGURATION)

units: mm
tolerance:
X≤10.00: ±0.30 mm
10.00<X≤30.00: ±0.50 mm
30.00<X≤100.00: ±1.0 mm
unless otherwise noted

DESCRIPTION	MATERIAL	PLATING/COLOR
shaft	zinc alloy	
bushing	zinc alloy	
driving plate	POM (UL94HB)	
reed	zinc	cupronickel
carbon plate	FR4 (UL94HB)	
terminals	cold rolled steel	tin
hoop	cold rolled steel	zinc

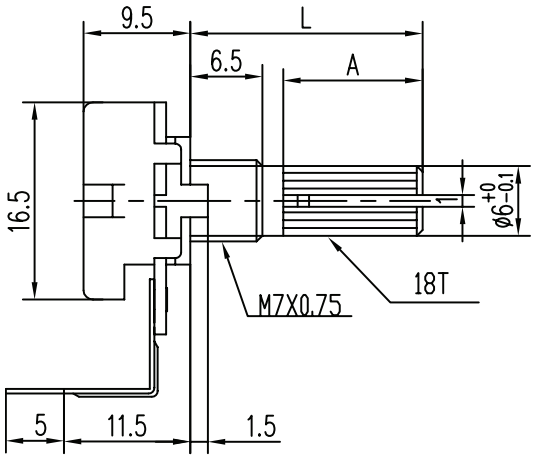

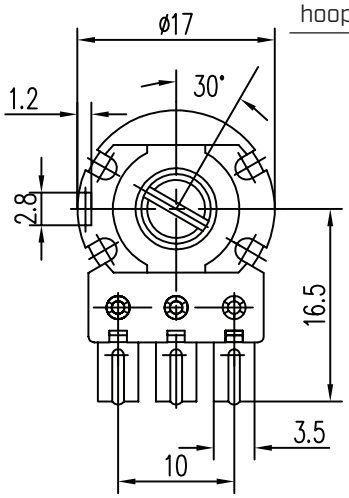

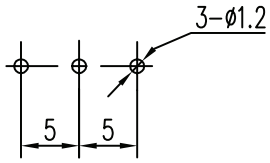

Recommended PCB Layout
Top View

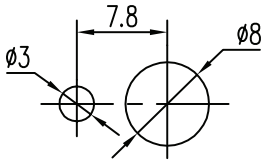

Recommended Panel Cutout
Front View

MECHANICAL DRAWING (DUAL SECTION, A TERMINAL CONFIGURATION)

units: mm
tolerance:
X≤10.00: ±0.30 mm
10.00<X≤30.00: ±0.50 mm
30.00<X≤100.00: ±1.0 mm
unless otherwise noted

DESCRIPTION	MATERIAL	PLATING/COLOR
shaft	zinc alloy	
bushing	zinc alloy	
driving plate	POM (UL94HB)	
reed	zinc	cupronickel
carbon plate	FR4 (UL94HB)	
terminals	cold rolled steel	tin
hoop	cold rolled steel	zinc

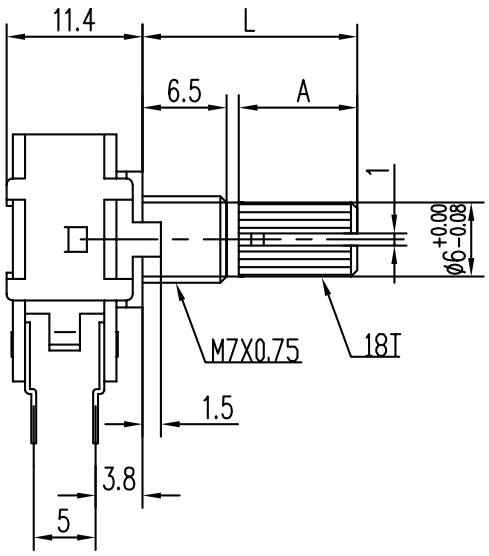

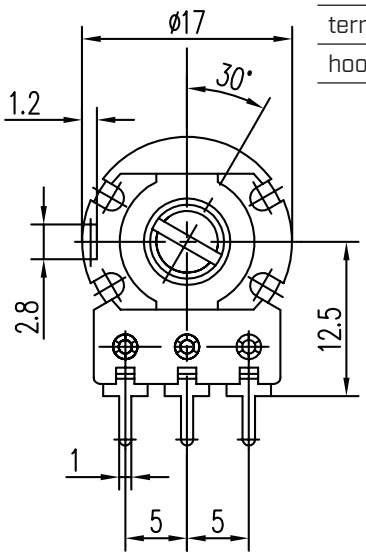

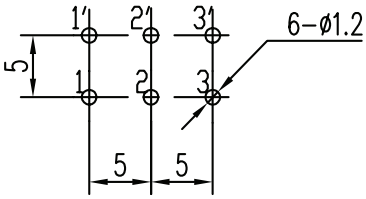

Recommended PCB Layout
Top View

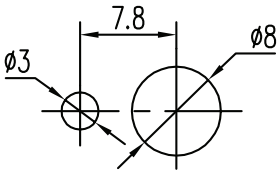

Recommended Panel Cutout
Front View

MECHANICAL DRAWING (DUAL SECTION, C TERMINAL CONFIGURATION)

units: mm
tolerance:
X≤10.00: ±0.30 mm
10.00<X≤30.00: ±0.50 mm
30.00<X≤100.00: ±1.0 mm
unless otherwise noted

DESCRIPTION	MATERIAL	PLATING/COLOR
shaft	zinc alloy	
bushing	zinc alloy	
driving plate	POM (UL94HB)	
reed	zinc	cupronickel
carbon plate	FR4 (UL94HB)	
terminals	cold rolled steel	tin
hoop	cold rolled steel	zinc

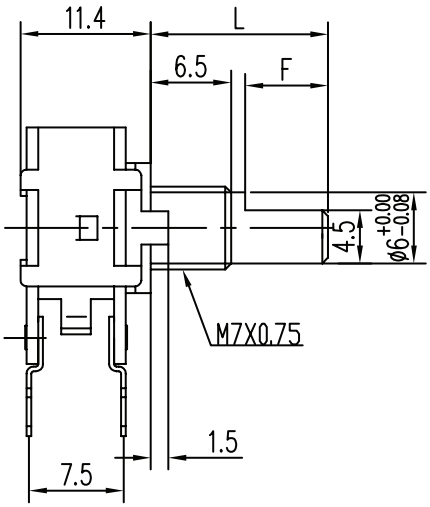

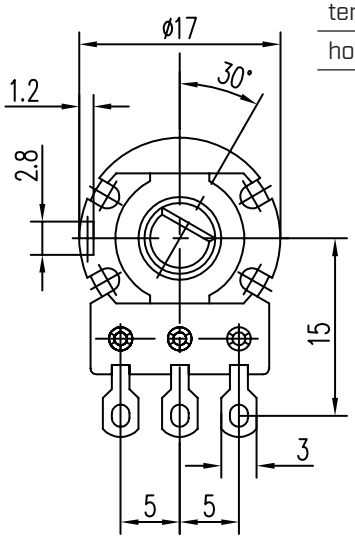

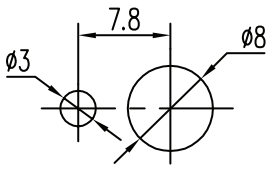

Recommended Panel Cutout
Front View

MECHANICAL DRAWING (DUAL SECTION, E TERMINAL CONFIGURATION)

units: mm
tolerance:
X≤10.00: ±0.30 mm
10.00<X≤30.00: ±0.50 mm
30.00<X≤100.00: ±1.0 mm
unless otherwise noted

DESCRIPTION	MATERIAL	PLATING/COLOR
shaft	zinc alloy	
bushing	zinc alloy	
driving plate	POM (UL94HB)	
reed	zinc	cupronickel
carbon plate	FR4 (UL94HB)	
terminals	cold rolled steel	tin
hoop	cold rolled steel	zinc

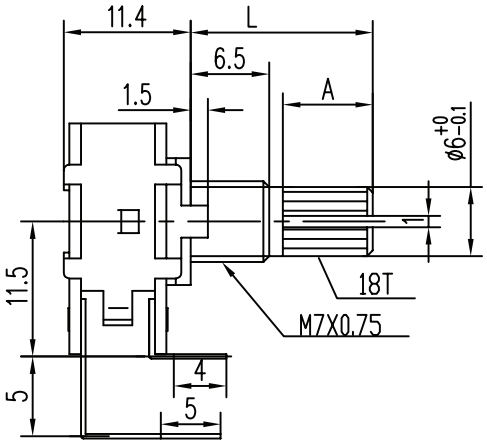

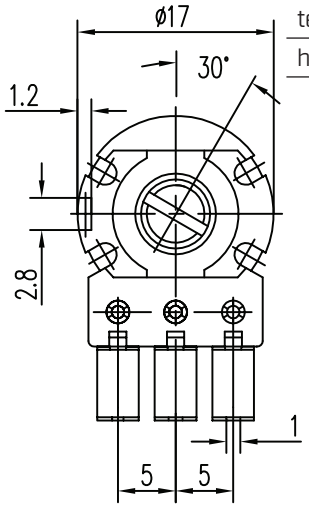

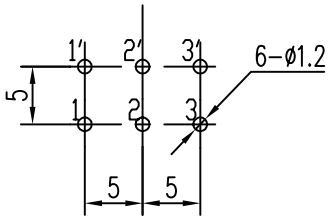

Recommended PCB Layout
Top View

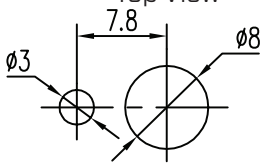

Recommended Panel Cutout
Front View

MECHANICAL DRAWING (DUAL SECTION, F TERMINAL CONFIGURATION)

units: mm
tolerance:
X≤10.00: ±0.30 mm
10.00<X≤30.00: ±0.50 mm
30.00<X≤100.00: ±1.0 mm
unless otherwise noted

DESCRIPTION	MATERIAL	PLATING/COLOR
shaft	zinc alloy	
bushing	zinc alloy	
driving plate	POM (UL94HB)	
reed	zinc	cupronickel
carbon plate	FR4 (UL94HB)	
terminals	cold rolled steel	tin
hoop	cold rolled steel	zinc

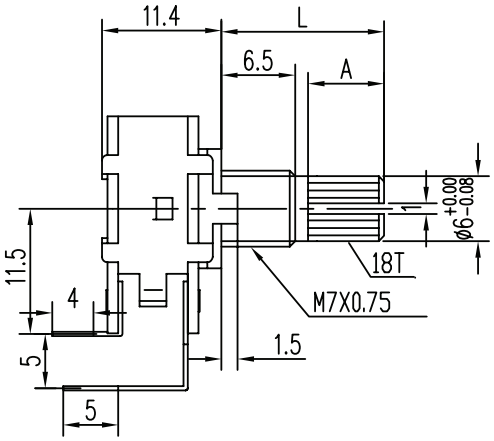

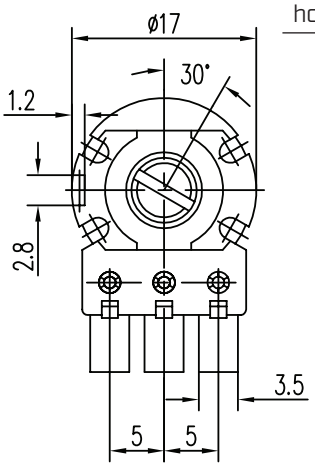

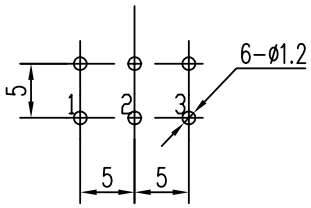

Recommended PCB Layout
Top View

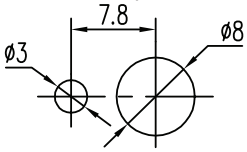

Recommended Panel Cutout
Front View

MECHANICAL DRAWING (SWITCH SECTION, A TERMINAL CONFIGURATION)

units: mm
tolerance:
X≤10.00: ±0.30 mm
10.00<X≤30.00: ±0.50 mm
30.00<X≤100.00: ±1.0 mm
unless otherwise noted

DESCRIPTION	MATERIAL	PLATING/COLOR
shaft	zinc alloy	
bushing	zinc alloy	
driving plate	POM (UL94HB)	
reed	zinc	cupronickel
carbon plate	FR4 (UL94HB)	
terminals	cold rolled steel	tin
hoop	cold rolled steel	zinc

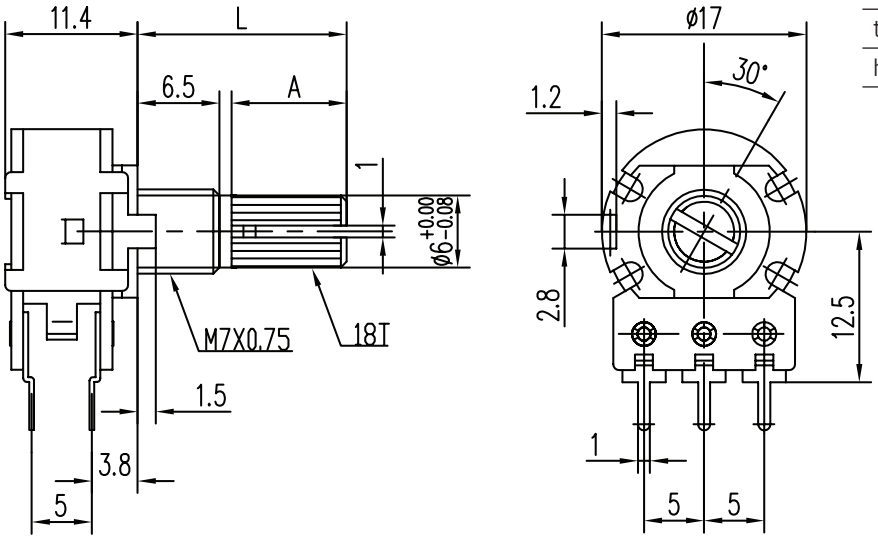

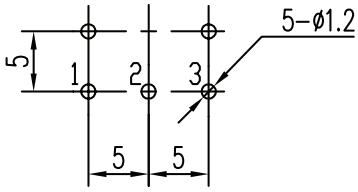

Recommended PCB Layout
Top View

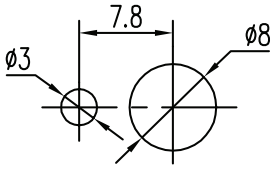

Recommended Panel Cutout
Front View

MECHANICAL DRAWING (SWITCH SECTION, C TERMINAL CONFIGURATION)

units: mm
tolerance:
X≤10.00: ±0.30 mm
10.00<X≤30.00: ±0.50 mm
30.00<X≤100.00: ±1.0 mm
unless otherwise noted

DESCRIPTION	MATERIAL	PLATING/COLOR
shaft	zinc alloy	
bushing	zinc alloy	
driving plate	POM (UL94HB)	
reed	zinc	cupronickel
carbon plate	FR4 (UL94HB)	
terminals	cold rolled steel	tin
hoop	cold rolled steel	zinc

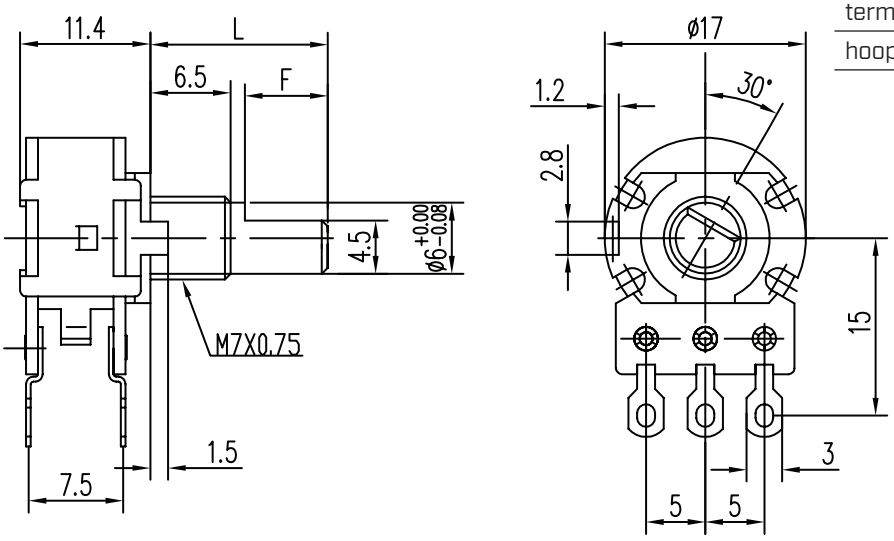

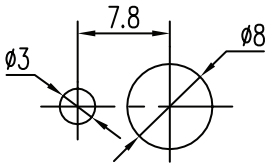

Recommended Panel Cutout
Front View

MECHANICAL DRAWING (SWITCH SECTION, E TERMINAL CONFIGURATION)

units: mm
tolerance:
X≤10.00: ±0.30 mm
10.00<X≤30.00: ±0.50 mm
30.00<X≤100.00: ±1.0 mm
unless otherwise noted

DESCRIPTION	MATERIAL	PLATING/COLOR
shaft	zinc alloy	
bushing	zinc alloy	
driving plate	POM (UL94HB)	
reed	zinc	cupronickel
carbon plate	FR4 (UL94HB)	
terminals	cold rolled steel	tin
hoop	cold rolled steel	zinc

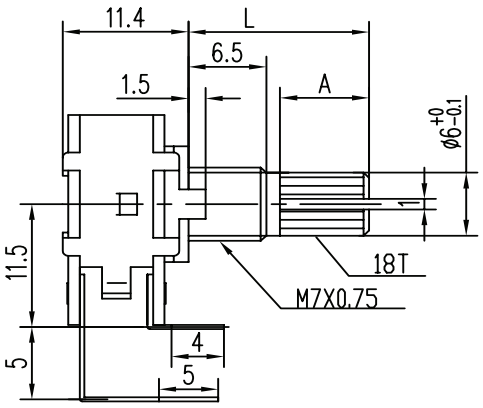

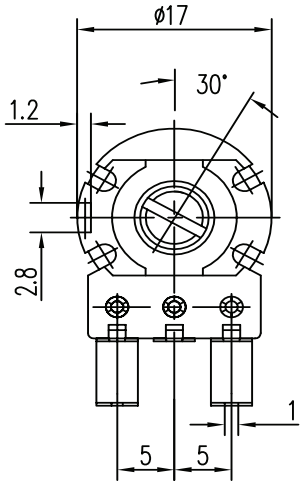

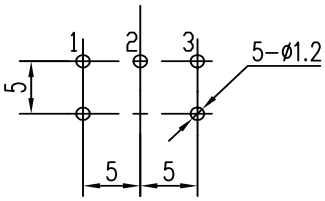

Recommended PCB Layout
Top View

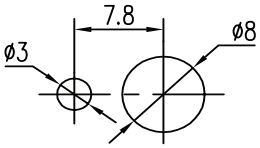

Recommended Panel Cutout
Front View

MOUNTING HARDWARE

units: mm
tolerance:
X≤10.00: ±0.30 mm
unless otherwise noted

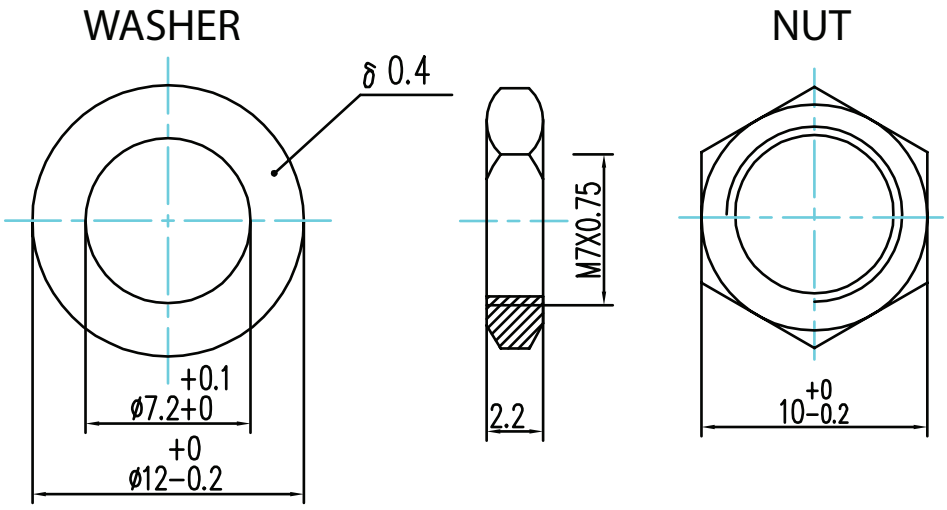

POWER DERATING CURVE

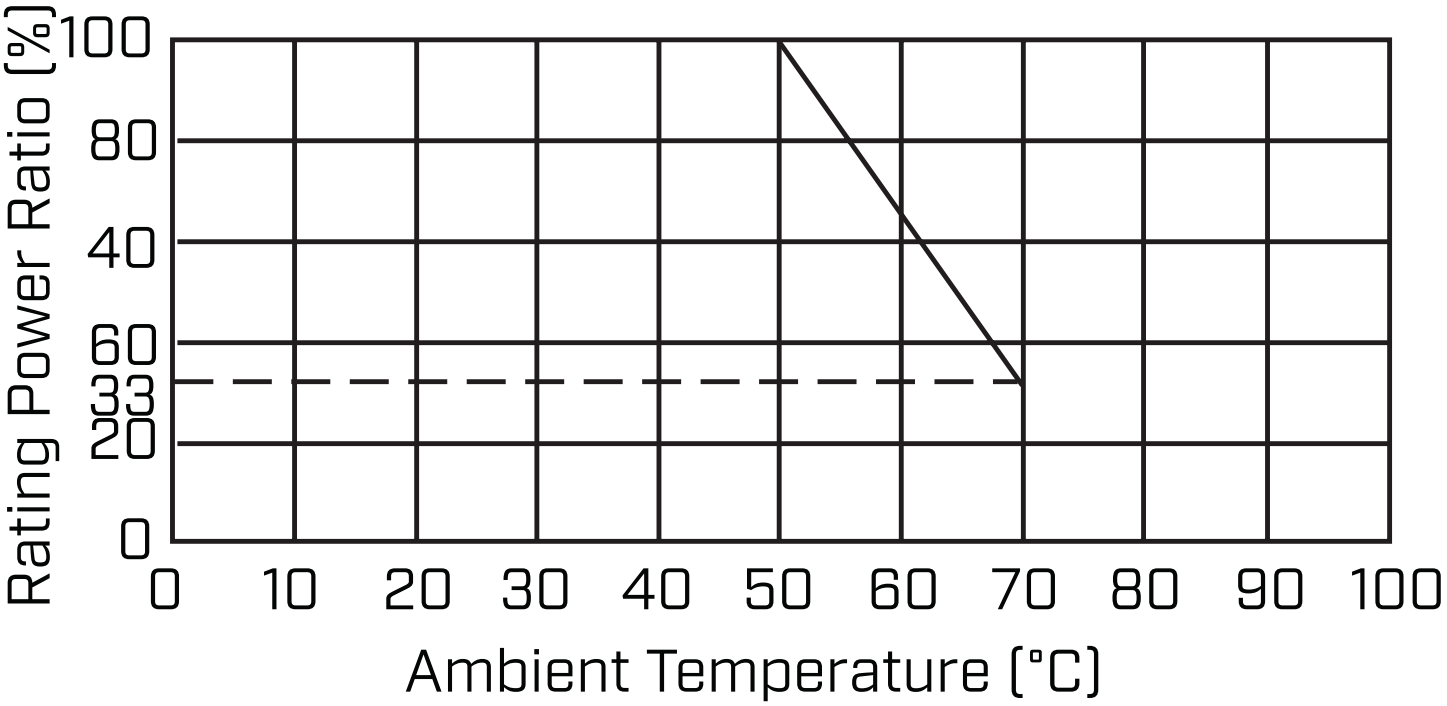

REVISION HISTORY

rev.	description	date
1.0	initial release	05/16/2023
1.01	updated taper detail	01/15/2024

The revision history provided is for informational purposes only and is believed to be accurate.

CUI Devices offers a one (1) year limited warranty. Complete warranty information is listed on our website.

CUI Devices reserves the right to make changes to the product at any time without notice. Information provided by CUI Devices is believed to be accurate and reliable. However, no responsibility is assumed by CUI Devices for its use, nor for any infringements of patents or other rights of third parties which may result from its use.

CUI Devices products are not authorized or warranted for use as critical components in equipment that requires an extremely high level of reliability. A critical component is any component of a life support device or system whose failure to perform can be reasonably expected to cause the failure of the life support device or system, or to affect its safety or effectiveness.