CUDEVICES

SERIES: CRJ010 | **DESCRIPTION:** MODULAR JACK

FEATURES

- 8P8C (RJ45)
- integrated magnetics
- 10/100 BaseT
- LED
- shielded

RoHS

SPECIFICATIONS

parameter	conditions/description	min	typ	max	units
rated voltage				150	Vac
rated current				1.5	A
withstanding voltage	for 1 minute		1,500		Vac
contact resistance				40	mΩ
insulation resistance		500			MΩ
insertion/withdrawal force				6.12	kgf
operating temperature		0		70	°C
storage temperature		-40		80	°C
life			1,000		cycles
flammability rating	UL94V-0				
RoHS	yes				
packaging	carton size: 400 x 303 x 258 mm tray QTY: 120 pcs per tray carton QTY: 1,200 pcs per carton				

SOLDERABILITY

parameter	conditions/description	min	typ	max	units
wave soldering	for maximum 5 seconds			240	°C

PART NUMBER KEY

CRJ010 - ML **X** - TH

Base Number

Contact Plating Thickness (gold):
1 = 6 µ"
3 = 30 µ"
4 = 50 µ"

MAGNETIC SPECIFICATIONS (AT 25°C)

parameter	conditions/description	min	typ	max	units
turns ratio	at 100 kHz, 0.1 V P1-P2 : J1-J2 = 1:1 (±5%) P3-P4 : J3-J6 = 1:1 (±5%) P7-P8 : J4-J5 = 1:1 (±5%) P9-P10 : J7-J8 = 1:1 (±5%)				
OCL	at 100 kHz, 0.1 V, 8 mA DC	350			µH
insertion loss	at 1.0~100 MHz at 100~125 MHz			-1.0 -1.2	dB dB
return loss	at 1~30 MHz at 30~60 MHz at 60~80 MHz at 80~100 MHz	-18 -16 -12 -10			dB dB dB dB
crosstalk	at 1~100 MHz	-30			dB
common mode rejection	at 1~100 MHz	-30			dB
hipot	input to output for 1 minute, 1 mA	1,500			Vac

SCHEMATIC

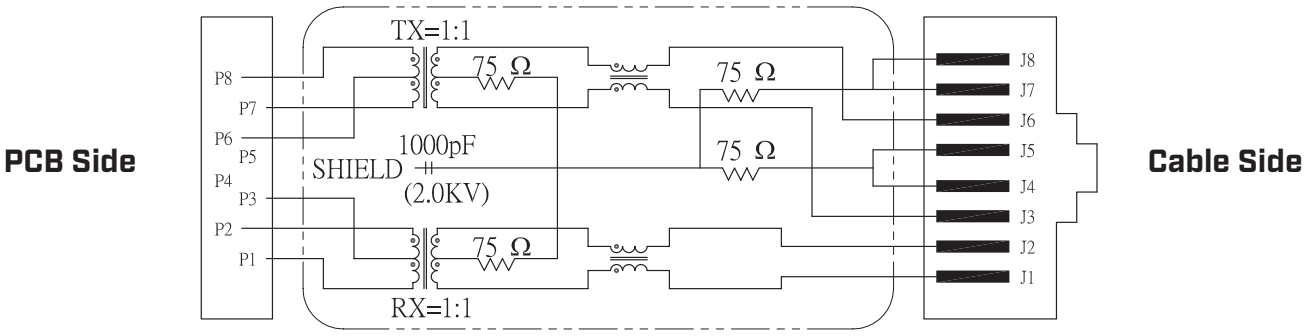

LED COLOR	WAVELENGTH	FORWARD VOLTAGE at IF 20 mA
Green	565~575 nm	2.5 V max
Yellow	585~595 nm	2.5 V max

MECHANICAL DRAWING

units: mm
tolerance:
X ±0.5 mm
X.X ±0.38 mm
X.XX ±0.25 mm
X.XXX ±0.10 mm
PCB: ±0.05 mm
PCB thickness: 1.6 mm
unless otherwise noted

ITEM	DESCRIPTION	MATERIAL	PLATING/COLOR
1	insulator	PBT (UL94V-0)	black
2	contact terminals	phosphor bronze	contact area: gold over nickel solder area: matte tin over nickel
3	shield	brass	nickel alloy

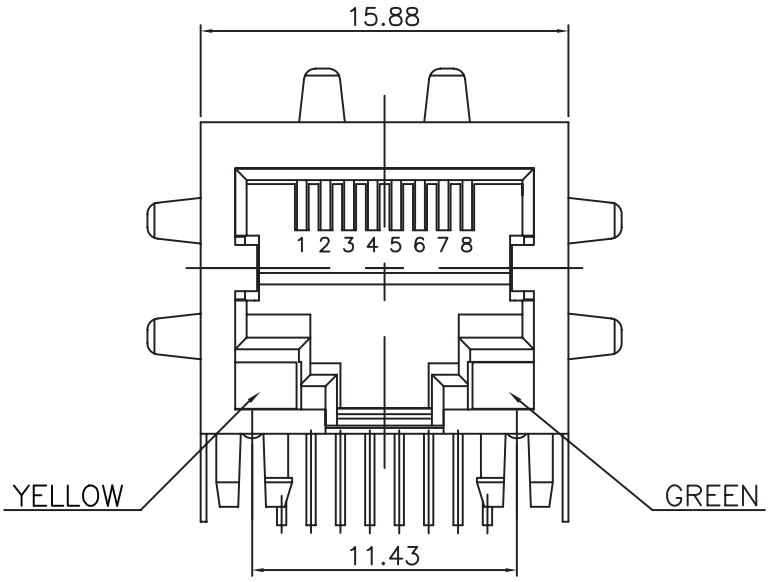

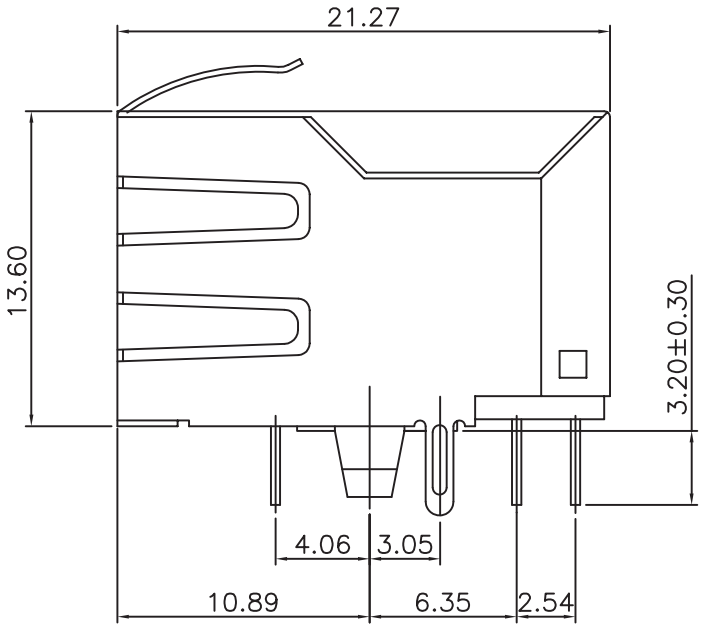

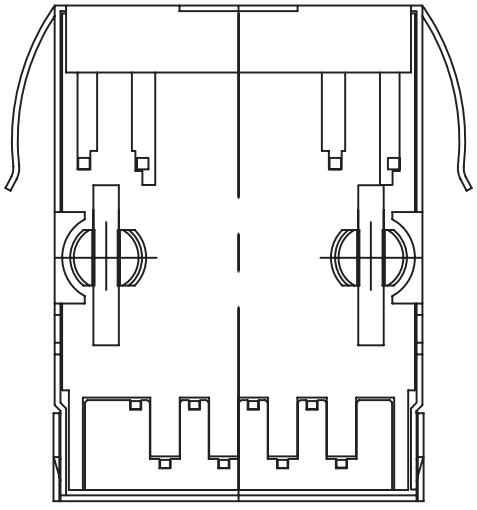

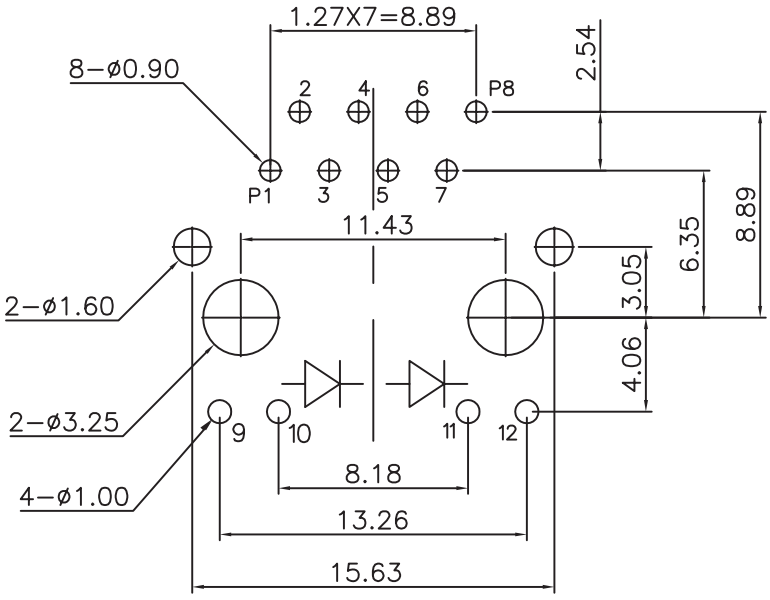

Recommended PCB Layout
Top View

REVISION HISTORY

rev.	description	date
1.0	initial release	03/31/2021
1.01	logo, datasheet style update	08/05/2022

The revision history provided is for informational purposes only and is believed to be accurate.

CUI Devices offers a one (1) year limited warranty. Complete warranty information is listed on our website.

CUI Devices reserves the right to make changes to the product at any time without notice. Information provided by CUI Devices is believed to be accurate and reliable. However, no responsibility is assumed by CUI Devices for its use, nor for any infringements of patents or other rights of third parties which may result from its use.

CUI Devices products are not authorized or warranted for use as critical components in equipment that requires an extremely high level of reliability. A critical component is any component of a life support device or system whose failure to perform can be reasonably expected to cause the failure of the life support device or system, or to affect its safety or effectiveness.

cuidevices.com