# MODEL: CPS-3016-105L085 | DESCRIPTION: PIEZO BUZZER TRANSDUCER

FEATURES
- 12 V rated
- externally driven
- wire leads

## SPECIFICATIONS

| parameter | conditions/description | min | typ | max | units |
|---|---|---|---|---|---|
| rated voltage | | | 12 | | Vdc |
| operating voltage | | 6 | | 16 | Vdc |
| current consumption | at rated voltage | | | 30 | mA |
| rated frequency | | 2,750 | 3,250 | 3,750 | Hz |
| sound pressure level | at 10 cm, rated voltage | 105 | | | dB |
| tone | single | | | | |
| dimensions | Ø30.6 x 16.0 | | | | mm |
| weight | | | 6.0 | | g |
| material | ABS777D | | | | |
| terminal | wire leads | | | | |
| operating temperature | | -40 | | 85 | °C |
| storage temperature | | -40 | | 85 | °C |
| washable | no | | | | |
| RoHS | yes | | | | |

Notes: 1. All specifications measured at 5~35°C, humidity at 45~85%, under 86~106 kPa pressure, unless otherwise noted.

## SOLDERABILITY

| parameter | conditions/description | min | typ | max | units |
|---|---|---|---|---|---|
| hand soldering | | 360 | 380 | 400 | °C |

## MECHANICAL DRAWING

units: mm
tolerance: ±0.5 mm

wire: UL1571 AWG 28

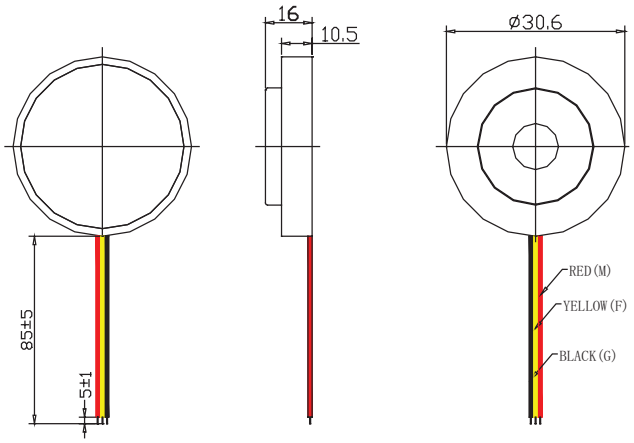


## PERFORMANCE CURVES

SPL: Voltage vs. Sound Pressure Level
I: Voltage vs. Current Consumption
at 10 cm

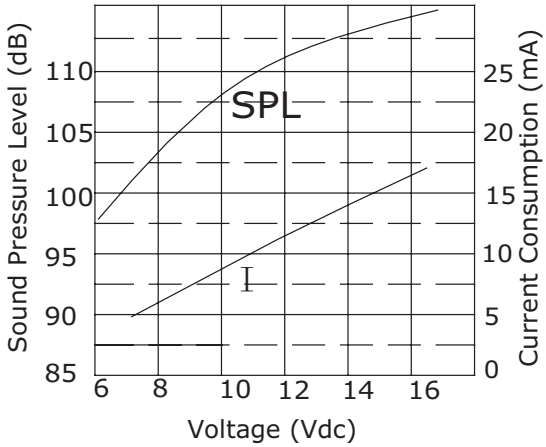


## DRIVING CIRCUIT

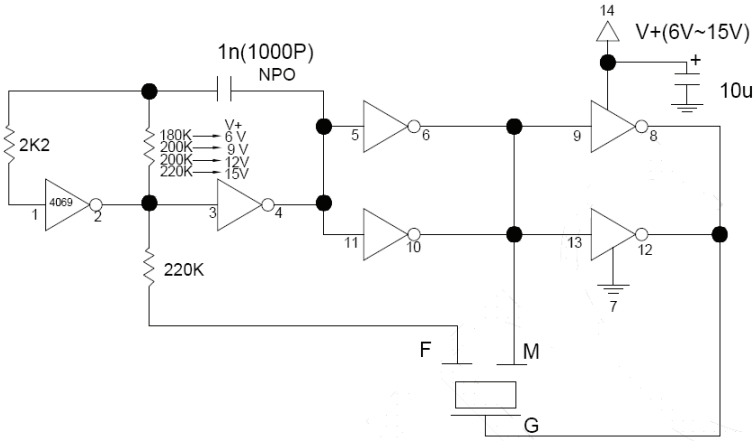


Notes: 1. The current consumption and the sound pressure level are measured by using the recommended driving circuit shown above.

## PACKAGING

units: mm

Carton Size: 500 x 260 x 490 mm
Carton QTY: 1,000 pcs per carton

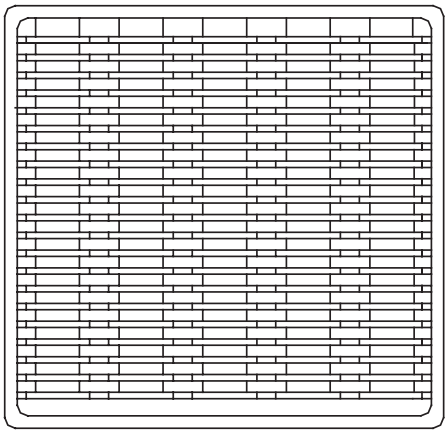

Per Tray 50 pcs.

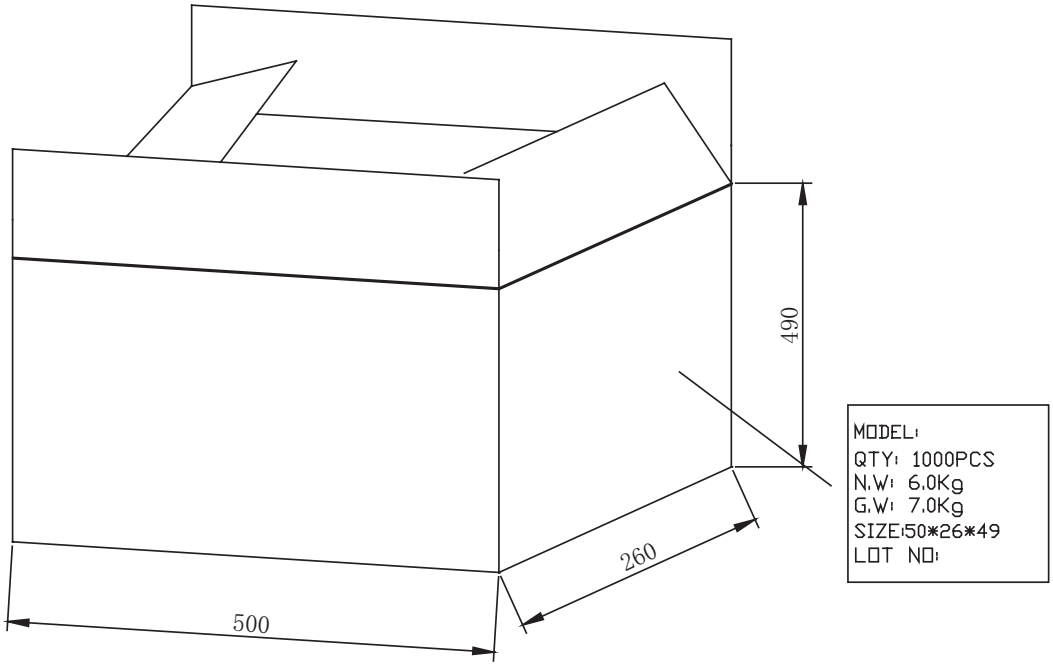


Per box 1000 pcs.

## REVISION HISTORY

| rev. | description | date |
|---|---|---|
| 1.0 | initial release | 01/08/2020 |
| 1.01 | logo, datasheet style update | 08/05/2022 |

The revision history provided is for informational purposes only and is believed to be accurate.

CUI Devices offers a one (1) year limited warranty. Complete warranty information is listed on our website.

CUI Devices reserves the right to make changes to the product at any time without notice. Information provided by CUI Devices is believed to be accurate and reliable. However, no responsibility is assumed by CUI Devices for its use, nor for any infringements of patents or other rights of third parties which may result from its use.

CUI Devices products are not authorized or warranted for use as critical components in equipment that requires an extremely high level of reliability. A critical component is any component of a life support device or system whose failure to perform can be reasonably expected to cause the failure of the life support device or system, or to affect its safety or effectiveness.

**cuidevices.com**