CUDEVICES

SERIES: CP20-M | **DESCRIPTION:** PELTIER MODULE

FEATURES

- micro size (less than 10 x 10 mm)
- wide ΔT max
- Qmax of 4.7 W
- Au plating available, suitable for soldering
- precise temperature control
- solid state construction

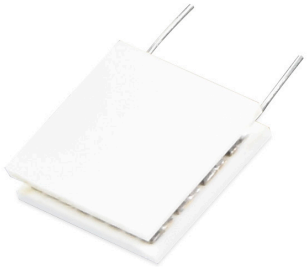

RoHS

MODEL

MODEL	input voltage[1] max (Vdc)	input current[2] max (A)	internal resistance[3] typ (Ω±10%)	output Qmax[4] T_h=27°C (W)	output Qmax[4] T_h=50°C (W)	output ΔTmax[5] T_h=27°C (°C)	output ΔTmax[5] T_h=50°C (°C)
CP2088-219	3.8	2.0	1.43	4.3	4.7	70	77
CP2088-258P[6]	3.8	2.0	1.43	4.3	4.7	70	77

Notes:
1. Maximum voltage at ΔT max and T_h=27°C
2. Maximum current to achieve ΔT max
3. Measured by AC 4-terminal method at 25°C
4. Maximum heat absorbed at cold side occurs at I_{max}, V_{max}, and ΔT=0°C
5. Maximum temperature difference occurs at I_{max}, V_{max}, and Q=0W (T max measured in a vacuum at 1.3 Pa)
6. Gold plating on both sides.

SOLDERABILITY

parameter	conditions/description	min	typ	max	units
soldering to plates	soldering iron temperature			150	°C

Note:
7. Only for gold plated models. The solder that holds the peltier together melts at 235°C. Caution must taken to not leave the soldering iron in contact with the surface too long, or damage to the peltier could occur.

SPECIFICATIONS

parameter	conditions/description	min	typ	max	units
solder melting temperature	connection between thermoelectric pairs	235			°C
assembly compression				0.8	MPa
RoHS	yes				

MECHANICAL DRAWING

units: mm

	MATERIAL	PLATING
ceramic plate	96% AL_2O_3	
wire leads	Ø0.25-0.3 mm annealed copper	tin
sealer	no sealing	
ceramic surface	Au plating on select models	

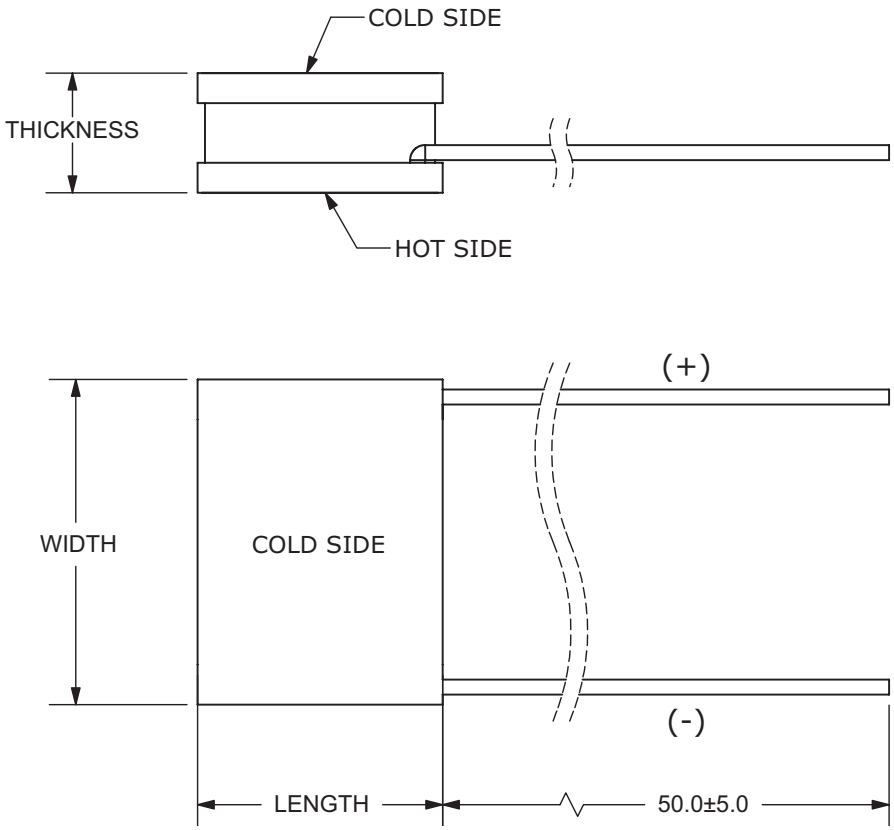

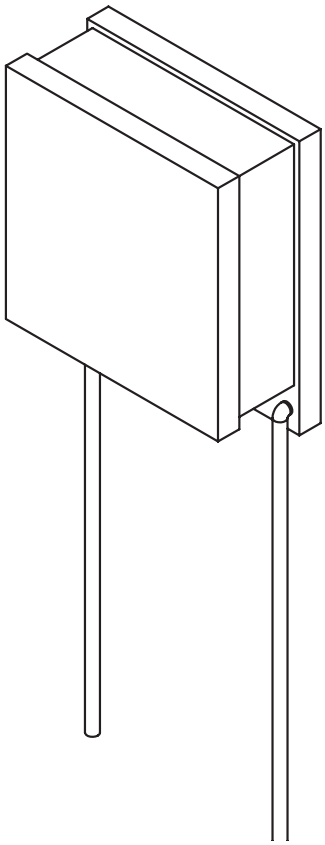

MODEL NO.	LENGTH (mm)	WIDTH (mm)	THICKNESS (mm)	GOLD PLATING HOT/ COLD SIDES
CP2088-219	8.8 ±0.3	8.8 ±0.3	2.19 ±0.15	NO
CP2088-258P	8.8 ±0.3	8.8 ±0.3	2.58 ±0.15	YES

CP2088-219 PERFORMANCE (Th=27°C)

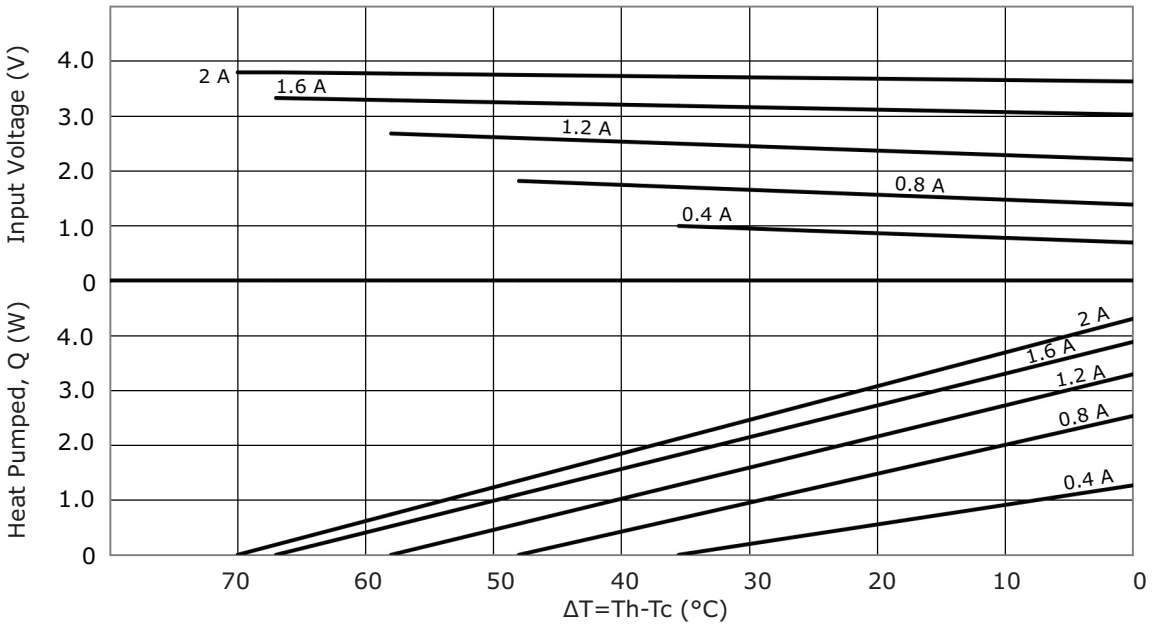

CP2088-219 PERFORMANCE (Th=50°C)

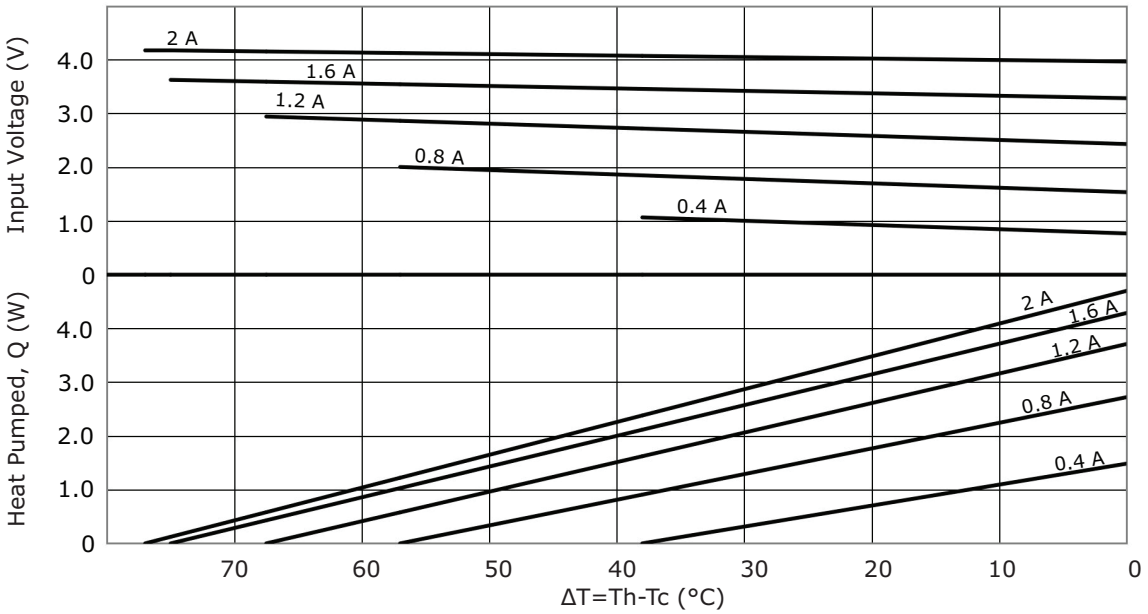

CP2088-258P PERFORMANCE (Th=27°C)

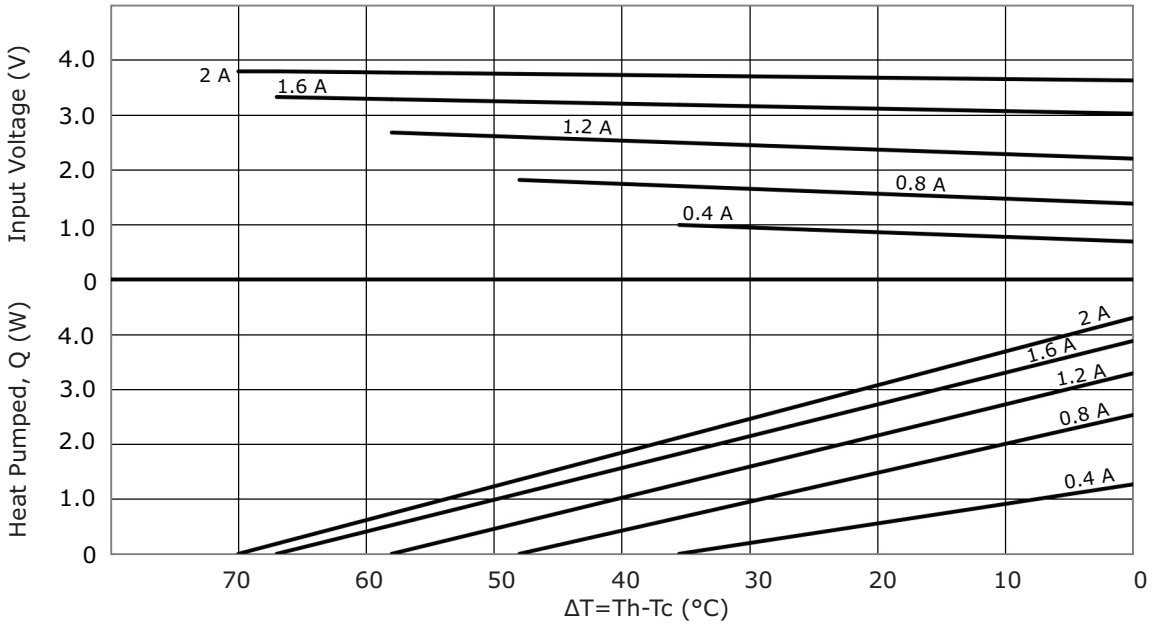

CP2088-258P PERFORMANCE (Th=50°C)

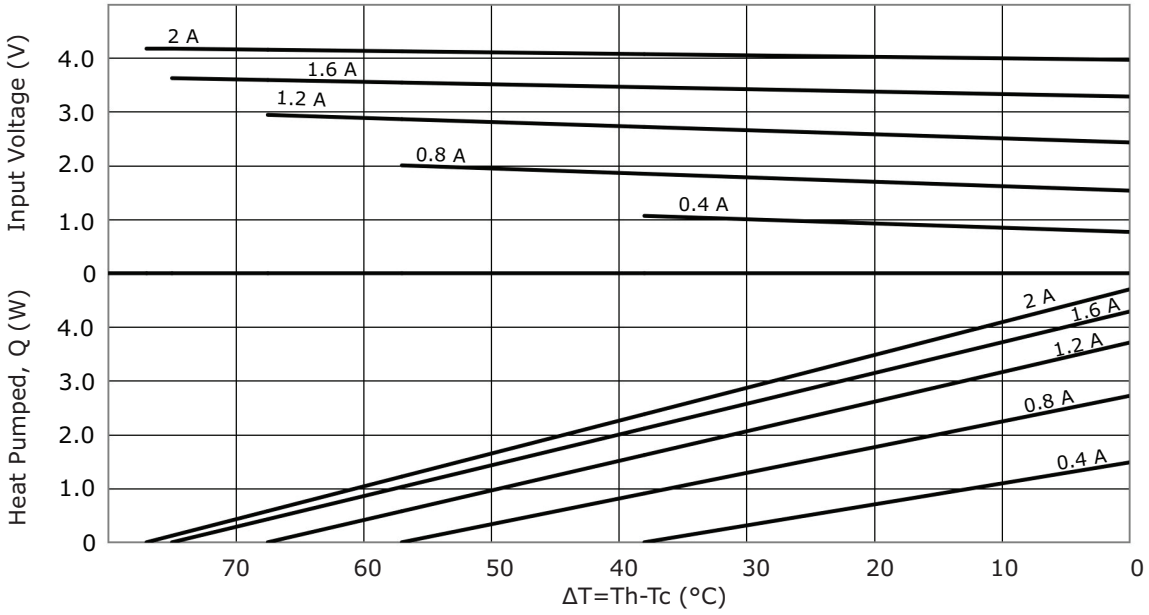

REVISION HISTORY

rev.	description	date
1.0	initial release	07/08/2020
1.01	logo, datasheet style update	08/05/2022

The revision history provided is for informational purposes only and is believed to be accurate.

CUI Devices offers a one (1) year limited warranty. Complete warranty information is listed on our website.

CUI Devices reserves the right to make changes to the product at any time without notice. Information provided by CUI Devices is believed to be accurate and reliable. However, no responsibility is assumed by CUI Devices for its use, nor for any infringements of patents or other rights of third parties which may result from its use.

CUI Devices products are not authorized or warranted for use as critical components in equipment that requires an extremely high level of reliability. A critical component is any component of a life support device or system whose failure to perform can be reasonably expected to cause the failure of the life support device or system, or to affect its safety or effectiveness.