CUDEVICES

MODEL: CMI-1240-SMT | DESCRIPTION: PIEZO BUZZER INDICATOR

FEATURES

- low current
- washable
- internally driven

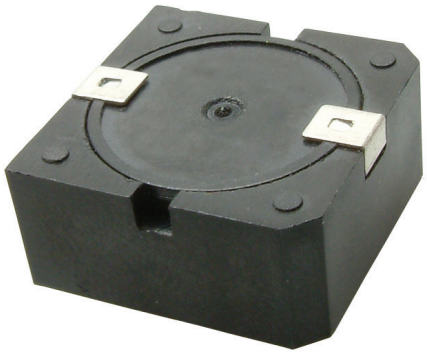

RoHS

SPECIFICATIONS

parameter	conditions/description	min	typ	max	units
rated voltage			12		Vdc
operating voltage		3		16	Vdc
current consumption	at rated voltage			18	mA
rated frequency		3,800	4,000	4,200	Hz
sound pressure level	at 10 cm, rated voltage	90			dB
dimensions	16.9 x 16.9 x 7.8				mm
weight				3.2	g
material	PPS UL-94 V-0 (black)				
terminal	SMT type (Au plating)				
operating temperature		-30		70	°C
storage temperature		-40		80	°C
RoHS	yes				

Notes: 1. All specifications measured at 5~35°C, humidity at 45~85%, under 86~106 kPa pressure, unless otherwise noted.
2. Add suffix "-TR" to the model number for tape & reel packaging, otherwise packaging will be in tubes.

SOLDERABILITY

parameter	conditions/description	min	typ	max	units
reel storage	at relative humidty <60%			30	°C
reflow soldering[3]	see recommended reflow soldering profile			260	°C
drying conditions[4]	bake at 40°C for 24 hours				

Note: 3. It is recommended to reflow solder within 48 hours from opening vacuum packaging at a temperature <30°C & relative humidity <60%.
4. When out of packaging for more than 48 hours.

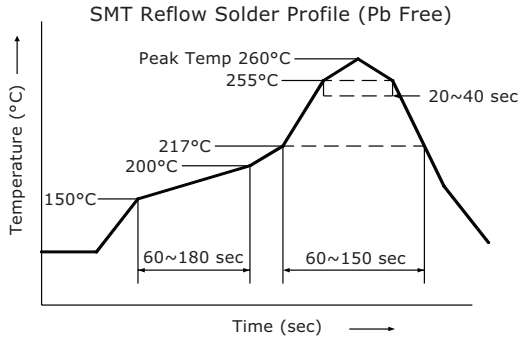

MECHANICAL DRAWING

units: mm
tolerance: ±0.5 mm

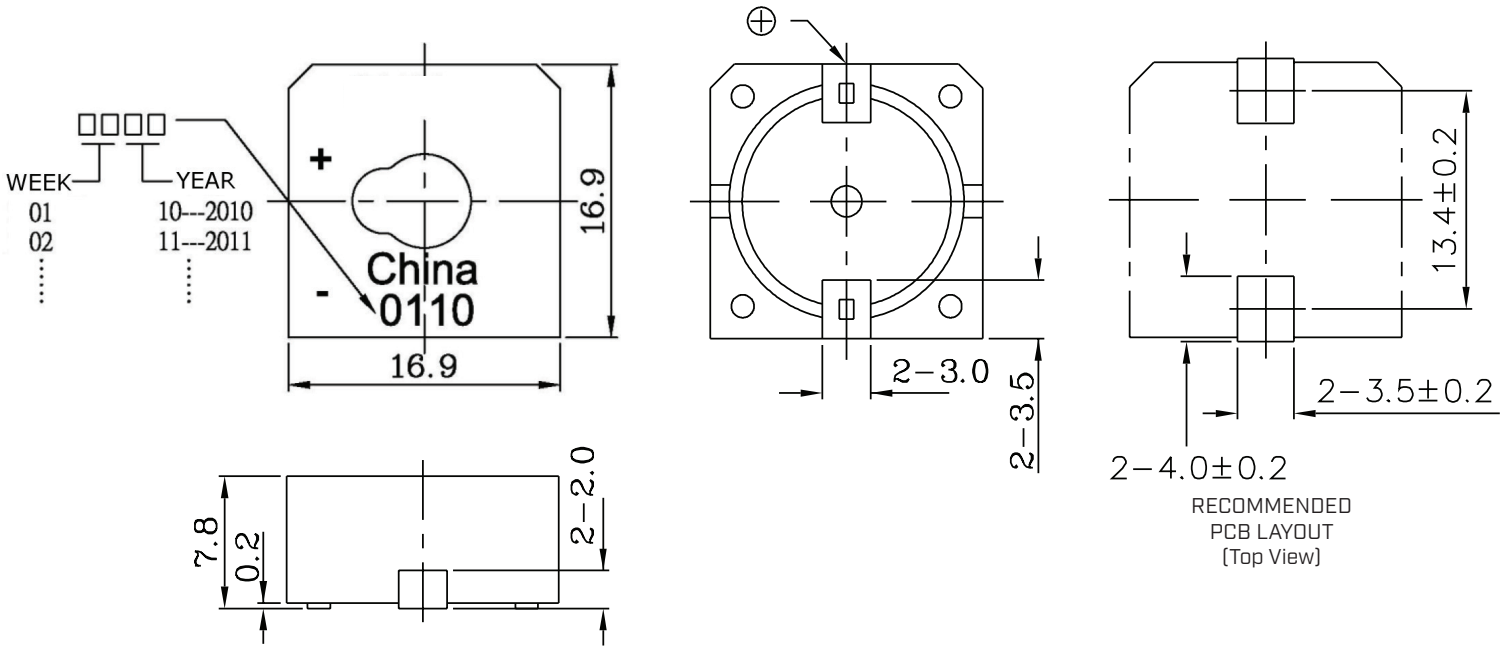

PERFORMANCE CURVES

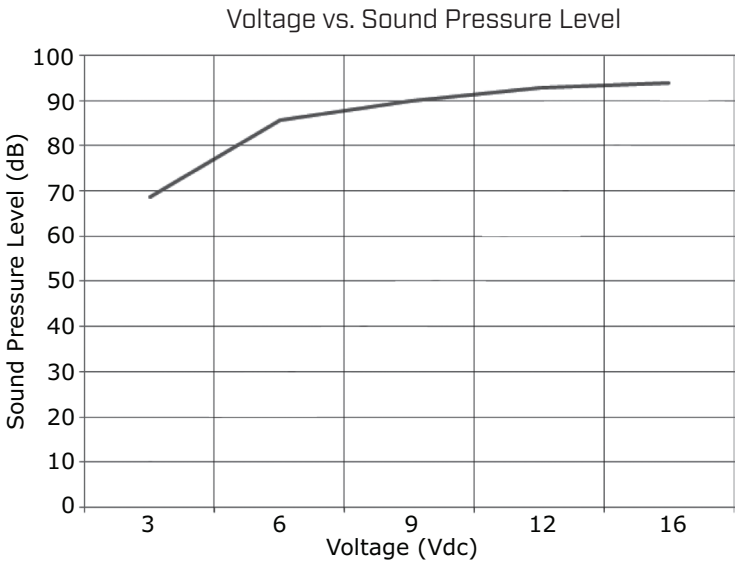

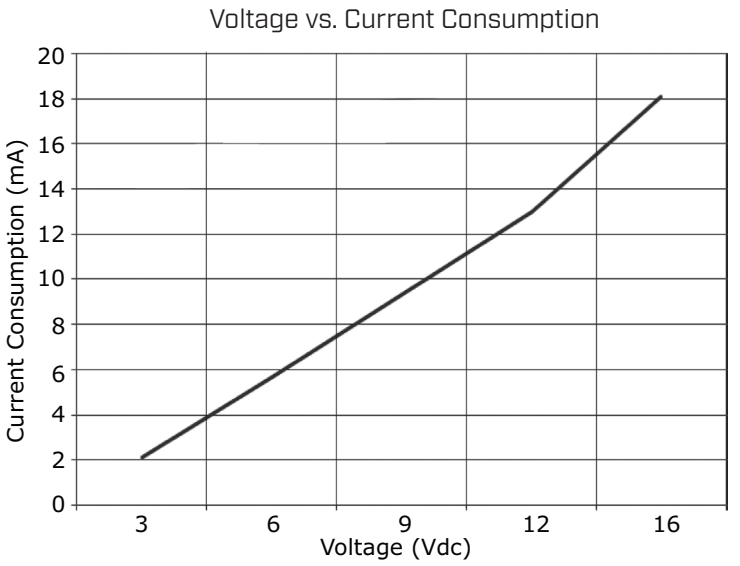

PACKAGING (TUBE)

units: mm

Tube Size: 450 x 18.6 x 9.7 mm
Six Tube Size: 450 x 37.2 x 29.1 mm
Carton Size: 540 x 190 x 100 mm
Tube QTY: 25 pcs per tube
Six Tube QTY: 150 pcs per six tube
Carton QTY: 1,500 pcs per carton

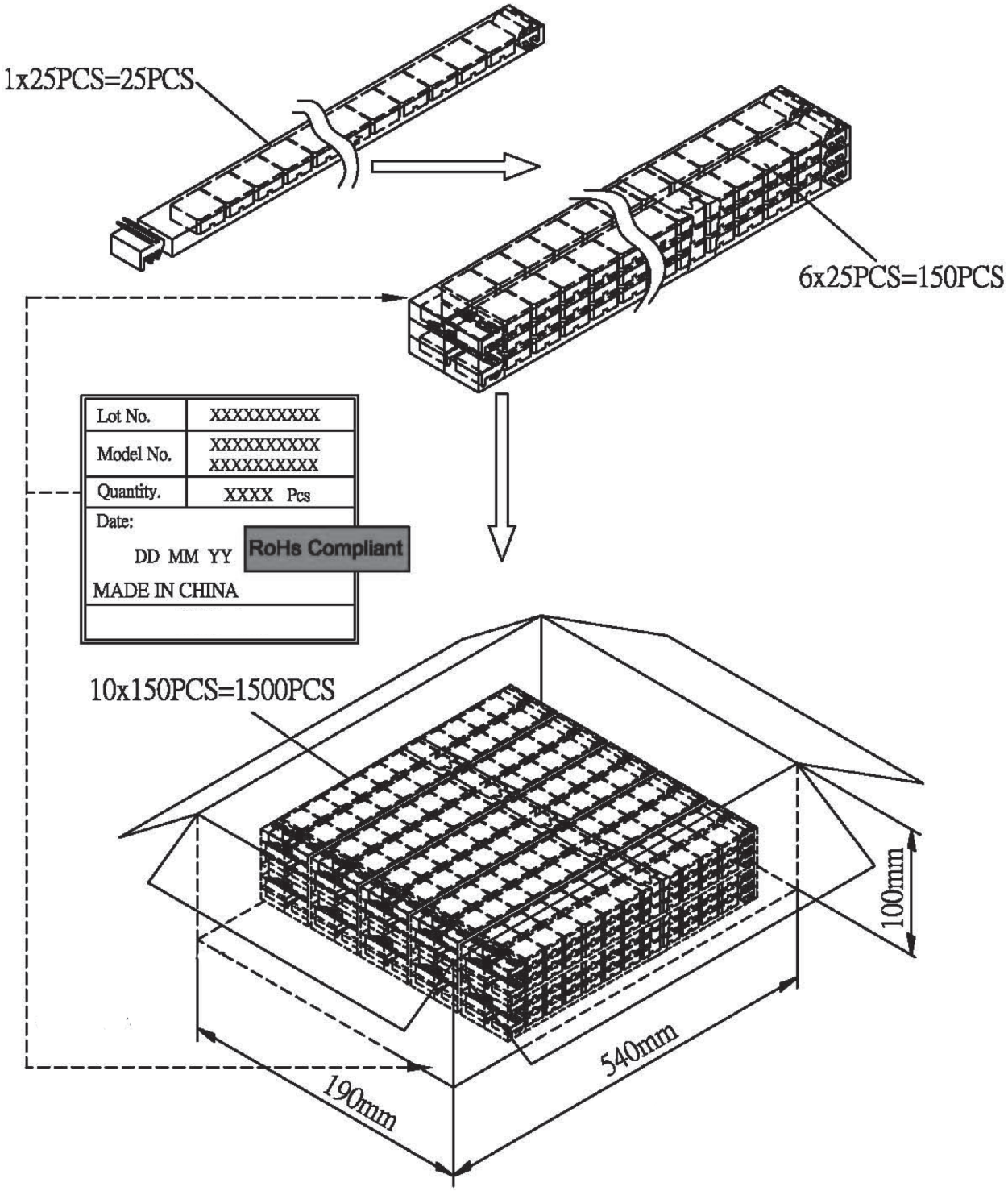

PACKAGING (TAPE & REEL)

units: mm

Reel Size: Ø330 mm
Carton Size: 349 x 177 x 359 mm
Reel QTY: 320 pcs per reel
Carton QTY: 1,280 pcs per carton

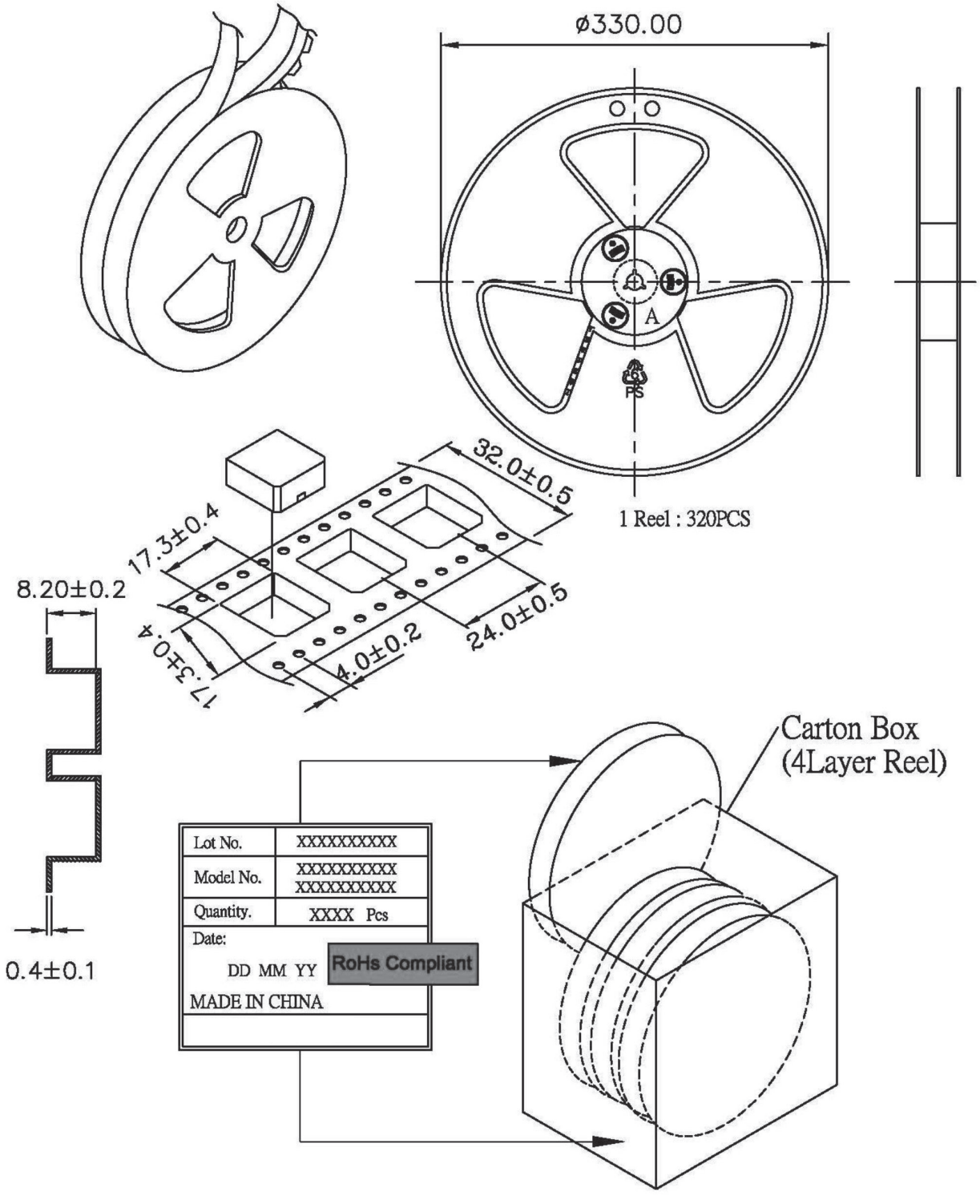

REVISION HISTORY

rev.	description	date
1.0	initial release	06/03/2005
1.01	updated part number, applied new spec template	05/13/2013
1.02	internal IC changed	06/29/2017
1.03	voltage range adjusted	09/28/2017
1.04	added storage and drying conditions, added TR package option	11/30/2018
1.05	brand update	01/07/2020
1.06	logo, datasheet style update	08/05/2022

The revision history provided is for informational purposes only and is believed to be accurate.

CUI Devices offers a one (1) year limited warranty. Complete warranty information is listed on our website.

CUI Devices reserves the right to make changes to the product at any time without notice. Information provided by CUI Devices is believed to be accurate and reliable. However, no responsibility is assumed by CUI Devices for its use, nor for any infringements of patents or other rights of third parties which may result from its use.

CUI Devices products are not authorized or warranted for use as critical components in equipment that requires an extremely high level of reliability. A critical component is any component of a life support device or system whose failure to perform can be reasonably expected to cause the failure of the life support device or system, or to affect its safety or effectiveness.

cuidevices.com