CUDEVICES

MODEL: CES-3990-158PM-67 | **DESCRIPTION:** SPEAKER

FEATURES

- 8 ohm rated impedance
- 1.5 W rated power
- IP67 rated

RoHS IP67

SPECIFICATIONS

parameter	conditions/description	min	typ	max	units
input power	max power: IEC-60268-5, filter 60 seconds on, 120 seconds off, 10 cycles (room temp)		1.5	2.5	W
impedance	at 2.0 kHz, 1.0 V	6.8	8	9.2	Ω
resonant frequency (Fo)	at 1.0 V	1,080	1,350	1,620	Hz
frequency response		Fo		20,000	Hz
sound pressure level	at 1.5 W, 10 cm, avg at 2.0, 3.0, 4.0, 5.0 kHz	97	100	103	dB
distortion	at 2.0 kHz, rated power, 10 cm			10	%
buzz, rattle, etc.	must be normal at sine wave, frequency range			3.46	V
polarity	cone moves forward w/ positive dc current to “+” terminal				
dimensions	Ø39.0 x 9.0				mm
magnet	Nd-Fe-B				
enclosure material	ABS				
cone material	PET				
terminal	wire leads with connector				
weight			11.8		g
operating temperature		-40		70	°C
storage temperature		-40		80	°C
RoHS	yes				
IP level	IP67 (front side)				

Notes: 1. All specifications measured at 25~75, humidity at 45~85%, under 86~106 kPa pressure, unless otherwise noted.

MECHANICAL DRAWING

units: mm
tolerance: ±0.5 mm

wire: UL1571 30 AWG
internal speaker: CMS-3060-128SP67
connector: Molex 51021-0200 or equivalent; P=1.25

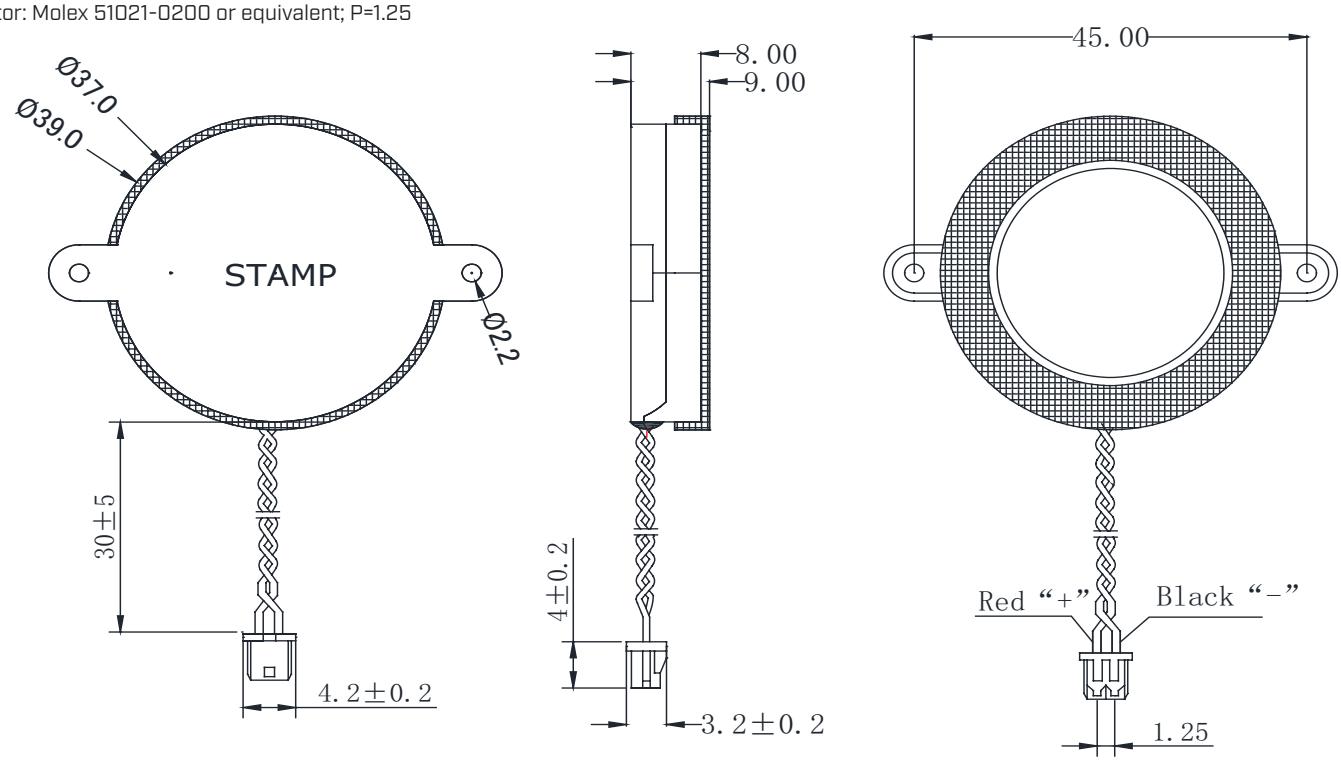

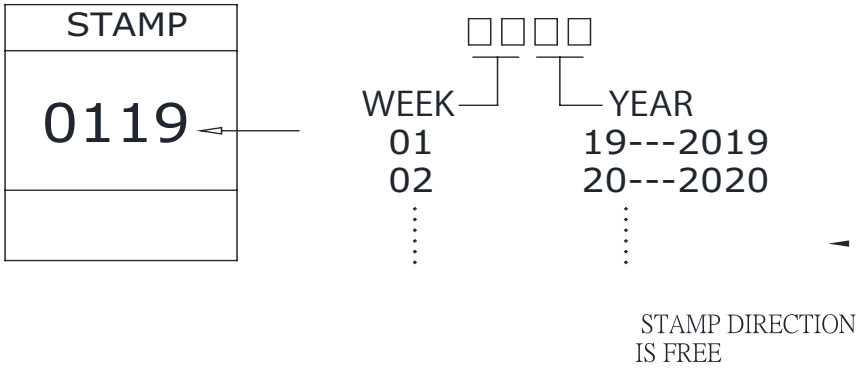

RESPONSE CURVES

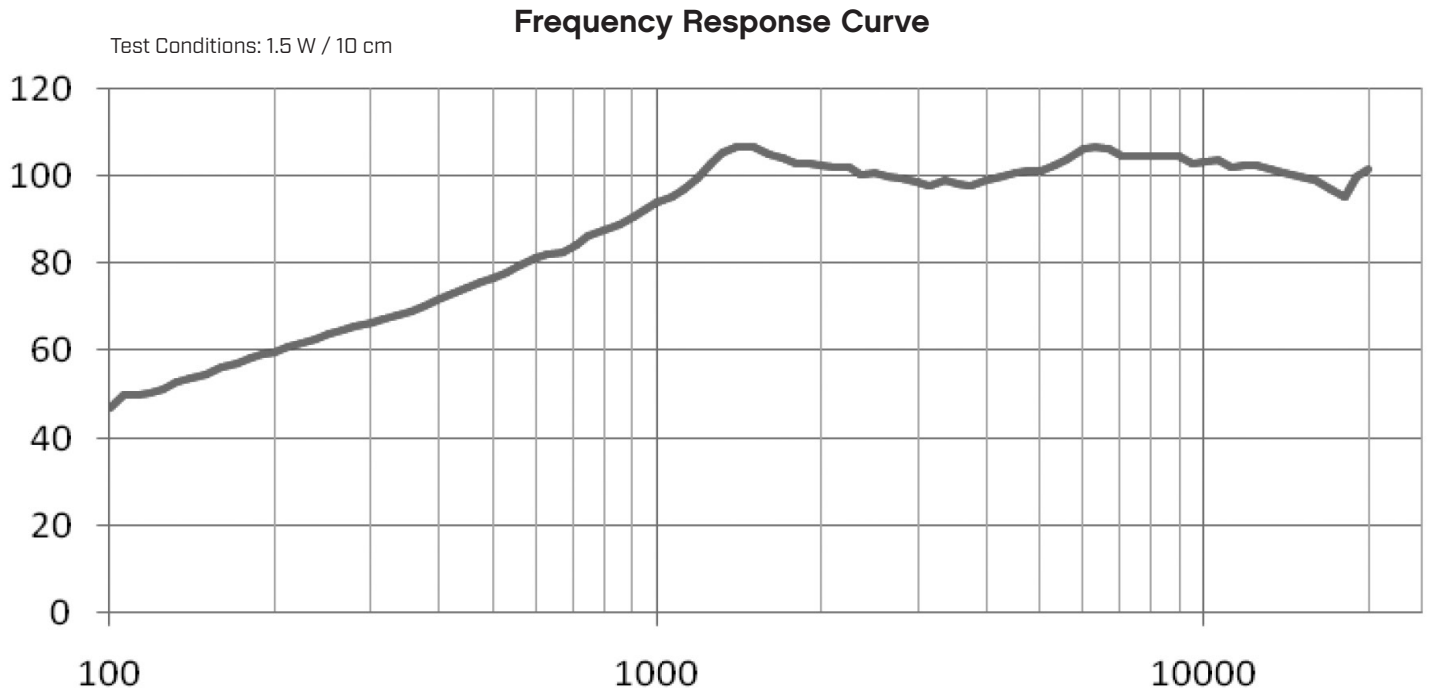

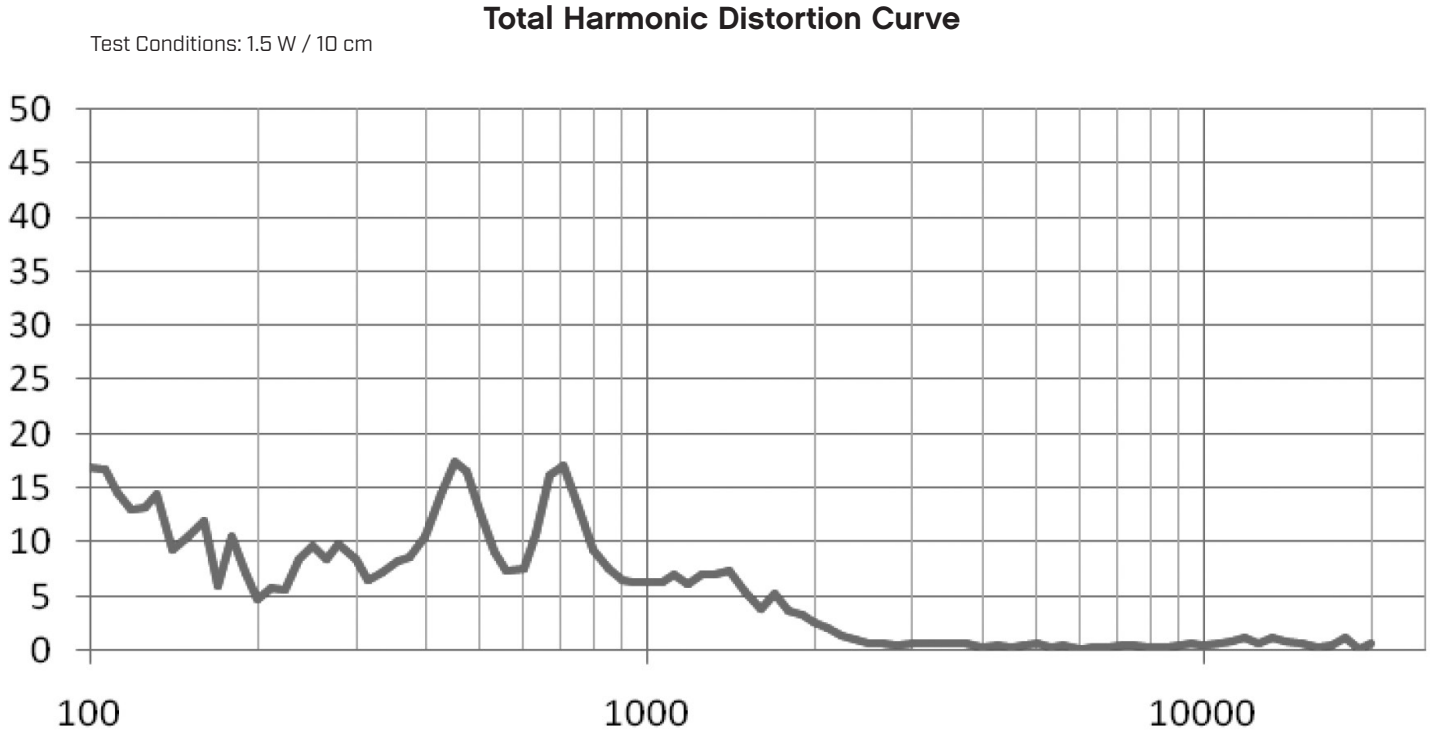

PACKAGING

units: mm

Tray Size: 290 x 245 x 15 mm
Tray QTY: 25 pcs per tray
Carton Size: 360 x 260 x 280 mm
Carton QTY: 500 pcs per carton

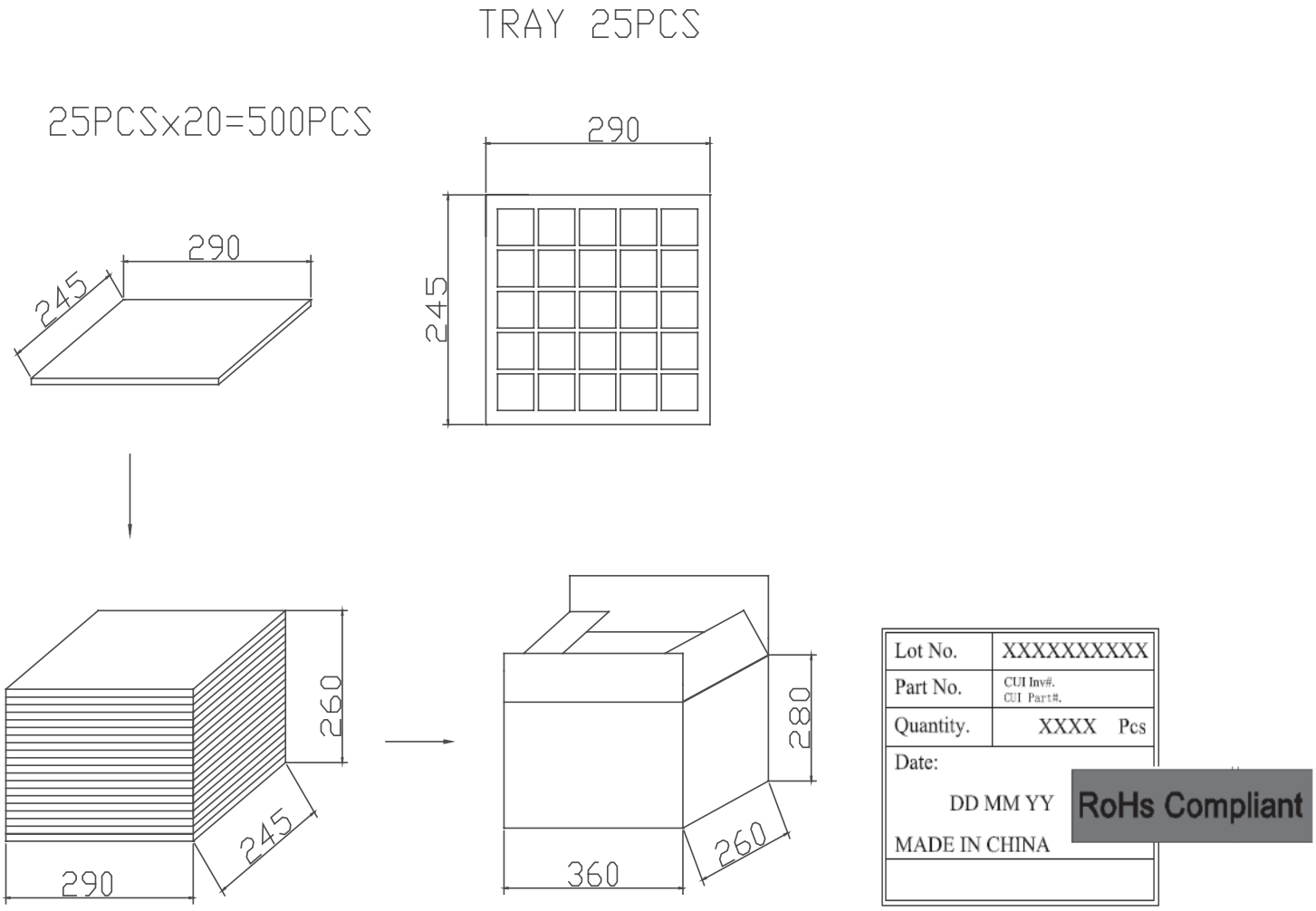

REVISION HISTORY

rev.	description	date
1.0	initial release	06/08/2020
1.01	changed packaging	10/08/2021
1.02	logo, datasheet style update	08/05/2022

The revision history provided is for informational purposes only and is believed to be accurate.

CUI Devices offers a one (1) year limited warranty. Complete warranty information is listed on our website.

CUI Devices reserves the right to make changes to the product at any time without notice. Information provided by CUI Devices is believed to be accurate and reliable. However, no responsibility is assumed by CUI Devices for its use, nor for any infringements of patents or other rights of third parties which may result from its use.

CUI Devices products are not authorized or warranted for use as critical components in equipment that requires an extremely high level of reliability. A critical component is any component of a life support device or system whose failure to perform can be reasonably expected to cause the failure of the life support device or system, or to affect its safety or effectiveness.