CUDEVICES

MODEL: MSS-102545-14A-90-D | **DESCRIPTION:** MINI SLIDE SWITCH

FEATURES

- red raised actuator
- blue body
- through hole mounting
- right angle

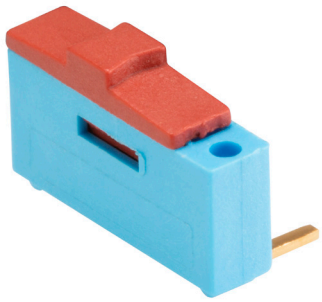

RoHS

SPECIFICATIONS

parameter	conditions/description	min	typ	max	units
rated voltage				12 24	Vdc Vdc
rated current	at 12 Vdc at 24 Vdc	1 1		500 300	mA mA
withstanding voltage	for 1 minute		500		Vac
contact resistance				30	mΩ
insulation resistance	at 500 Vdc	10,000			MΩ
operating force		100	250	400	gf
actuator travel			1.6		mm
operating temperature		-40		85	°C
storage temperature		-40		85	°C
life	with load without load		2,000 10,000		cycles cycles
flammability rating	UL94V-0				
RoHS	yes				
packaging	bulk, 200 pcs per bag				

SOLDERABILITY

parameter	conditions/description	min	typ	max	units
hand soldering	for 3~4 seconds			350	°C
wave soldering	for maximum 5 seconds			260	°C

MECHANICAL DRAWING

units: mm
tolerance: ±0.1 mm
unless otherwise noted

ITEM	DESCRIPTION	MATERIAL	PLATING/COLOR
1	actuator	PA66 (UL94V-0)	red
2	housing	PA66 (UL94V-0)	blue
3	terminals	nickel	gold

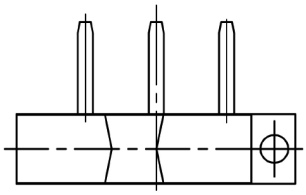

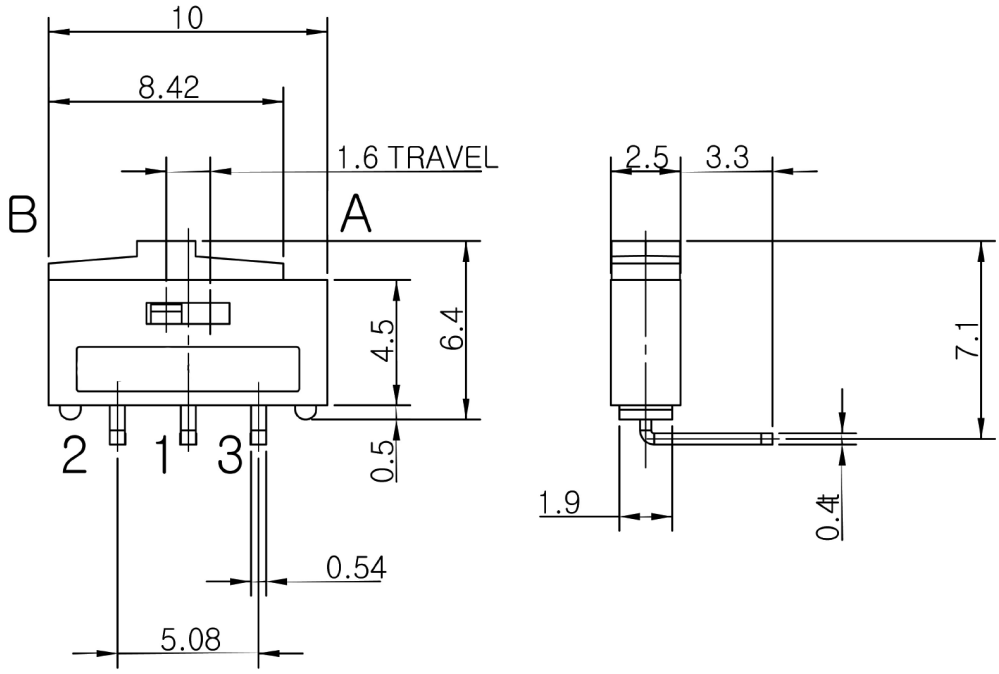

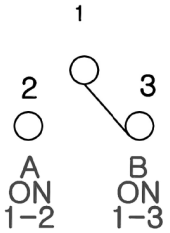

Schematic

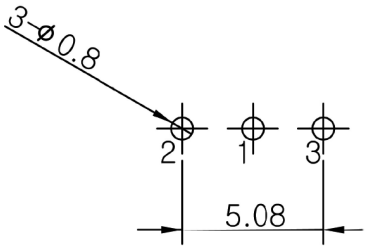

Recommended PCB Layout
Top View

REVISION HISTORY

rev.	description	date
1.0	initial release	02/19/2021
1.01	logo, datasheet style update	08/05/2022

The revision history provided is for informational purposes only and is believed to be accurate.

CUI Devices offers a one (1) year limited warranty. Complete warranty information is listed on our website.

CUI Devices reserves the right to make changes to the product at any time without notice. Information provided by CUI Devices is believed to be accurate and reliable. However, no responsibility is assumed by CUI Devices for its use, nor for any infringements of patents or other rights of third parties which may result from its use.

CUI Devices products are not authorized or warranted for use as critical components in equipment that requires an extremely high level of reliability. A critical component is any component of a life support device or system whose failure to perform can be reasonably expected to cause the failure of the life support device or system, or to affect its safety or effectiveness.