CUI DEVICES

MODEL: PD-40VS | **DESCRIPTION:** POWER DIN JACK

FEATURES
- PCB mount
- vertical
- shielded

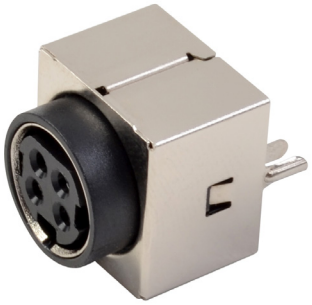

RoHS

SPECIFICATIONS

parameter	conditions/description	min	typ	max	units
rated input voltage			20		Vdc
rated input current	all pins			7.5	A
contact resistance				30	mΩ
insulation resistance	at 500 Vdc	100			MΩ
voltage withstand	for 1 minute			500	Vac
insertion force				4.5	kgf
withdrawal force		0.9		3.0	kgf
operating temperature		-25		70	°C
storage temperature		-25		70	°C
life			5,000		cycles
flammability rating	UL94V-0				
RoHS	yes				

SOLDERABILITY

parameter	conditions/description	min	typ	max	units
hand soldering	for 3~5 seconds	350	360	370	°C

MECHANICAL DRAWING

units: mm[inch]
tolerance: ±0.3 mm

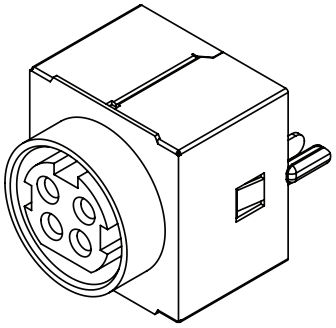

	MATERIAL	PLATING
housing	PBT	
cover	PBT	black
contact terminals	0.3T phoshor bronze	silver
metal shell	0.3T bronze	nickel
inner shield	0.4T bronze	nickel

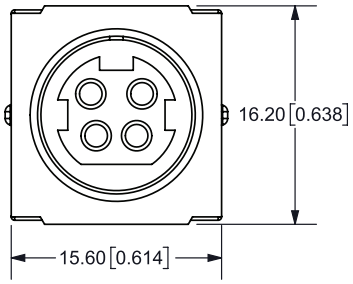

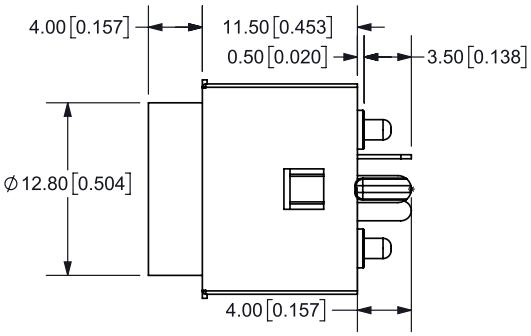

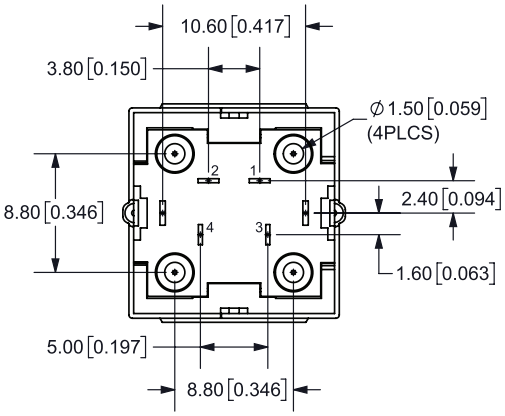

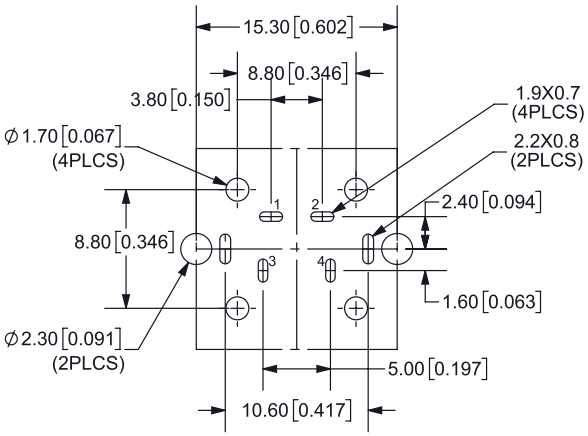

Recommended PCB Layout
Top View

REVISION HISTORY

rev.	description	date
1.0	initial release	08/02/2011
1.01	brand update	03/31/2020

The revision history provided is for informational purposes only and is believed to be accurate.

CUI DEVICES

CUI Devices offers a one (1) year limited warranty. Complete warranty information is listed on our website.

CUI Devices reserves the right to make changes to the product at any time without notice. Information provided by CUI Devices is believed to be accurate and reliable. However, no responsibility is assumed by CUI Devices for its use, nor for any infringements of patents or other rights of third parties which may result from its use.

CUI Devices products are not authorized or warranted for use as critical components in equipment that requires an extremely high level of reliability. A critical component is any component of a life support device or system whose failure to perform can be reasonably expected to cause the failure of the life support device or system, or to affect its safety or effectiveness.