CUI DEVICES

MODEL: IA-MM3563 | **DESCRIPTION:** AUDIO INLINE ADAPTER

FEATURES

- 6.3 mm mono to 3.5 mm mono
- hexagonal cover

RoHS

SPECIFICATIONS

parameter	conditions/description	min	typ	max	units
rated input voltage			12		Vdc
rated input current				1	A
contact resistance	between plug and jack			1	Ω
insulation resistance	at 300 Vdc	2			MΩ
insertion force	when mating with a standard jack	0.4		4	kgf
withdrawal force	when mating with a standard jack	0.4		4	kgf
operating temperature		-25		70	°C
operating humidity				85	%
life			5,000		cycles
flammability rating	see material table				
RoHS	yes				

MECHANICAL DRAWING

units: mm
tolerance:
X≤1.0: ±0.1 mm
1.0<X≤6.0: ±0.2 mm
6.0<X≤12.0: ±0.3 mm
12.0<X≤25.0: ±0.4 mm
X>25.0: ±0.5 mm
unless otherwise noted

ITEM	DESCRIPTION	MATERIAL	PLATING/COLOR
1	plug tip	brass	nickel
2	insulator	ABS (UL94HB)	black
3	plug sleeve	brass	nickel
4	body	brass	nickel
5	cover	PVC	black
6	receptacle sleeve	brass	nickel
7	receptacle tip	phosphor bronze	nickel
8	plastic tube	PE	

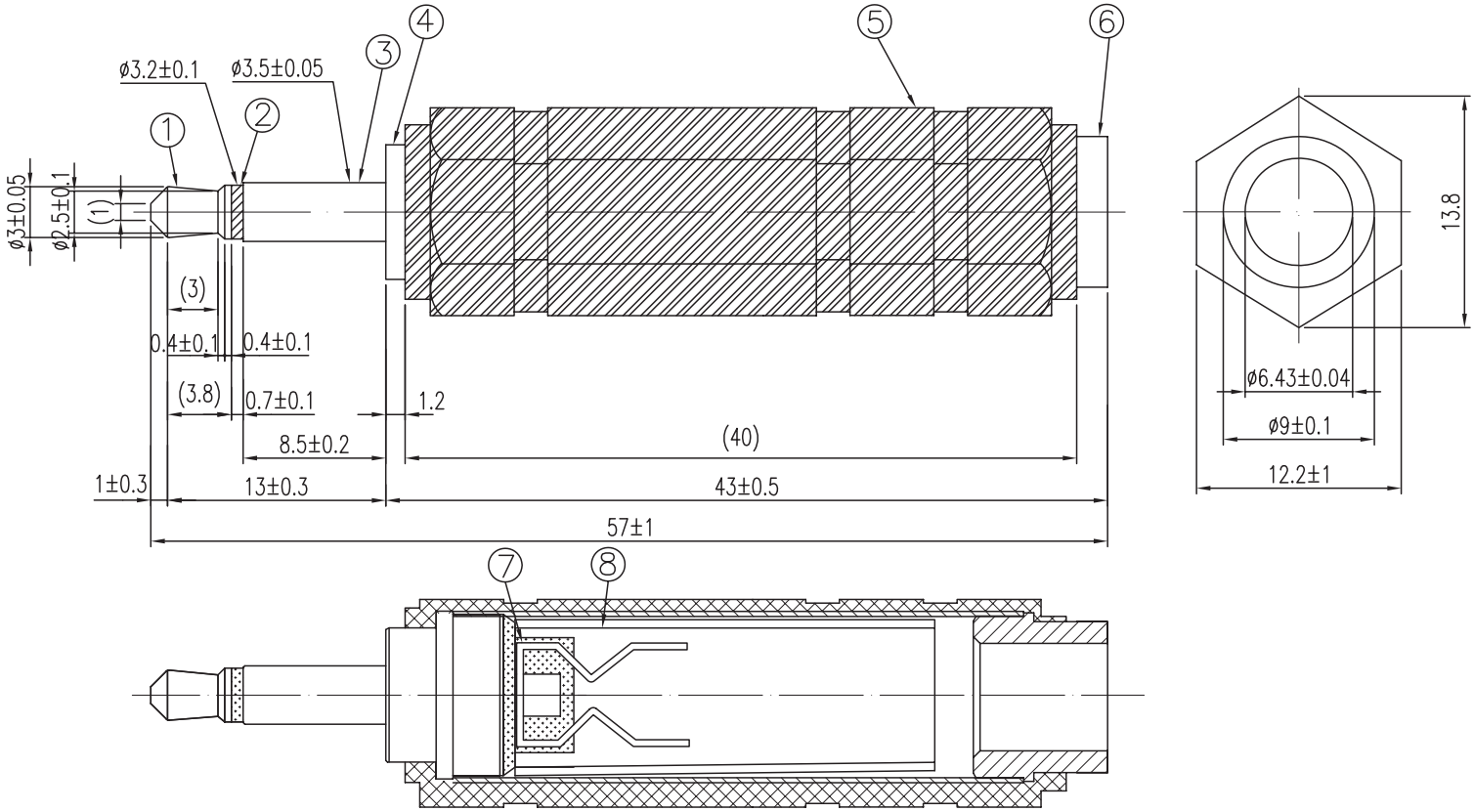

Ø3.5 Mono Plug Ø6.3 Mono Receptacle

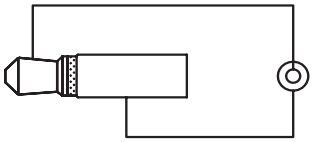

Schematic

REVISION HISTORY

rev.	description	date
1.0	initial release	06/15/2018
1.01	brand update	10/18/2019

The revision history provided is for informational purposes only and is believed to be accurate.

CUI DEVICES

CUI Devices offers a one (1) year limited warranty. Complete warranty information is listed on our website.

CUI Devices reserves the right to make changes to the product at any time without notice. Information provided by CUI Devices is believed to be accurate and reliable. However, no responsibility is assumed by CUI Devices for its use, nor for any infringements of patents or other rights of third parties which may result from its use.

CUI Devices products are not authorized or warranted for use as critical components in equipment that requires an extremely high level of reliability. A critical component is any component of a life support device or system whose failure to perform can be reasonably expected to cause the failure of the life support device or system, or to affect its safety or effectiveness.

cuidevices.com