MODEL: GC0351P | DESCRIPTION: SPEAKER

FEATURES

- 16 x 35 mm
- rectangular frame
- 1.0 W
- 8 Ω
- neodymium magnet
- cloth cone

SPECIFICATIONS

parameter	conditions/description	min	typ	max	units
input power			1.0	2.0	W
impedance	at 1.2 kHz, 1.0 V	6.8	8	9.2	Ω
resonant frequency (Fo)	at 1.0 V	440	550	660	Hz
frequency response		Fo		13,000	Hz
sound pressure level	at 1.0 W, 50 cm, avg at 0.6, 0.8, 1.0, 1.2 kHz	77	80	83	dB
buzz, rattle, etc.	must be normal at sine wave			2.83	V
dimensions	35 x 16 x 8				mm
magnet	Nd-Fe-B				
cone material	cloth				
terminal	solder pads				
weight			4.2		g
operating temperature		-25		60	°C
hand soldering	for maximum 3 seconds	340	350	360	°C
RoHS	yes				

MECHANICAL DRAWING

units: mm
tolerance: ±0.2 mm

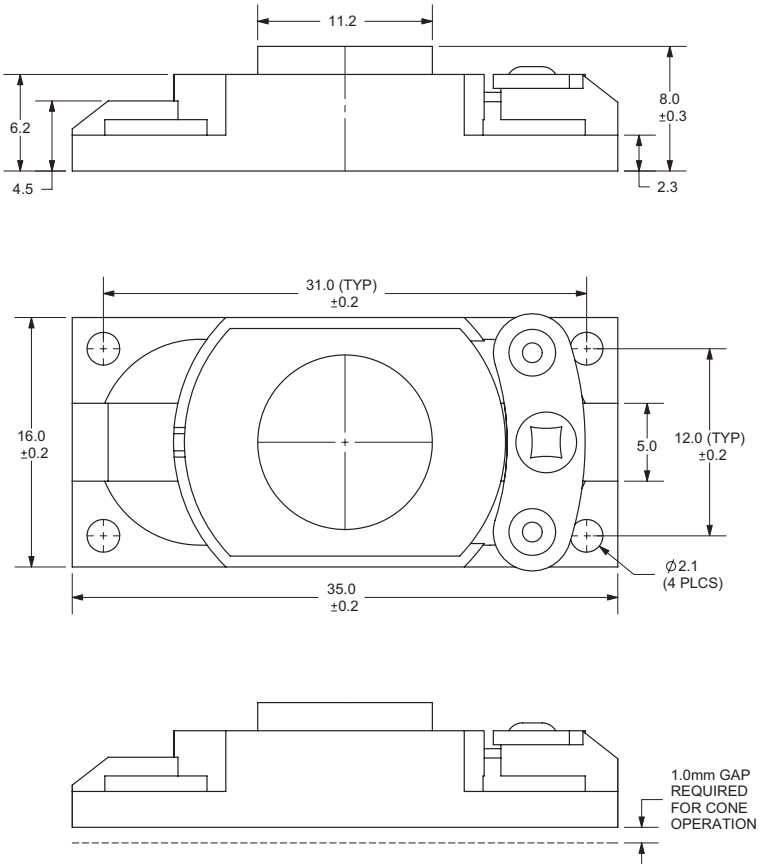

FREQUENCY RESPONSE CURVE

parameter	conditions/description
potentiometer range	50 dB
rectifier	RMS
lower limit frequency	20 Hz
wr. speed	100 mm/sec
zero level	50 dB

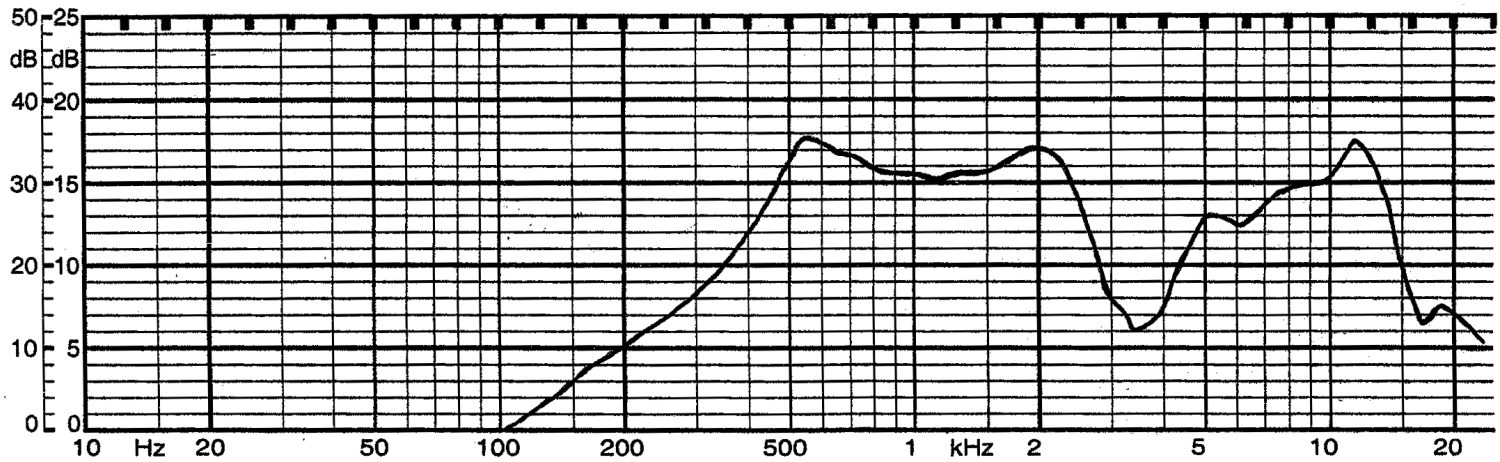

REVISION HISTORY

rev.	description	date
1.0	initial release	06/04/2007
1.01	new template applied, updated sound pressure level	04/23/2012
1.02	brand update	07/01/2020
1.03	logo, datasheet style update	08/05/2022

The revision history provided is for informational purposes only and is believed to be accurate.

CUI Devices offers a one (1) year limited warranty. Complete warranty information is listed on our website.

CUI Devices reserves the right to make changes to the product at any time without notice. Information provided by CUI Devices is believed to be accurate and reliable. However, no responsibility is assumed by CUI Devices for its use, nor for any infringements of patents or other rights of third parties which may result from its use.

CUI Devices products are not authorized or warranted for use as critical components in equipment that requires an extremely high level of reliability. A critical component is any component of a life support device or system whose failure to perform can be reasonably expected to cause the failure of the life support device or system, or to affect its safety or effectiveness.