MODEL: CS-3603 | DESCRIPTION: SOLID STATE INDICATOR

FEATURES

- solid state
- driving circuit
- wire leads
- mounting tabs

SPECIFICATIONS

parameter	conditions/description	min	typ	max	units
rated voltage			3.0		Vdc
operating voltage		2.0		4.0	Vdc
current consumption	at rated voltage			40	mA
rated frequency		250	400	550	Hz
sound pressure level	at 30 cm, rated voltage (A-weight free air)	78			dBA
tone	continuous				
dimensions	33.5 x 17.0 x 15.3				mm
weight			8.4		g
material	ABS (white)				
terminal	wire leads				
operating temperature		-30		70	°C
storage temperature		-35		75	°C
RoHS	yes				

Notes: 1. All specifications measured at 5-35°C, humidity at 45-85%, under 86-106 kPa pressure, unless otherwise noted.

SOLDERABILITY

parameter	conditions/description	min	typ	max	units
hand soldering	for maximum 2 seconds	330		380	°C

MECHANICAL DRAWING

units: mm
tolerance: ±0.5 mm

wire: UL 1007 28 AWG

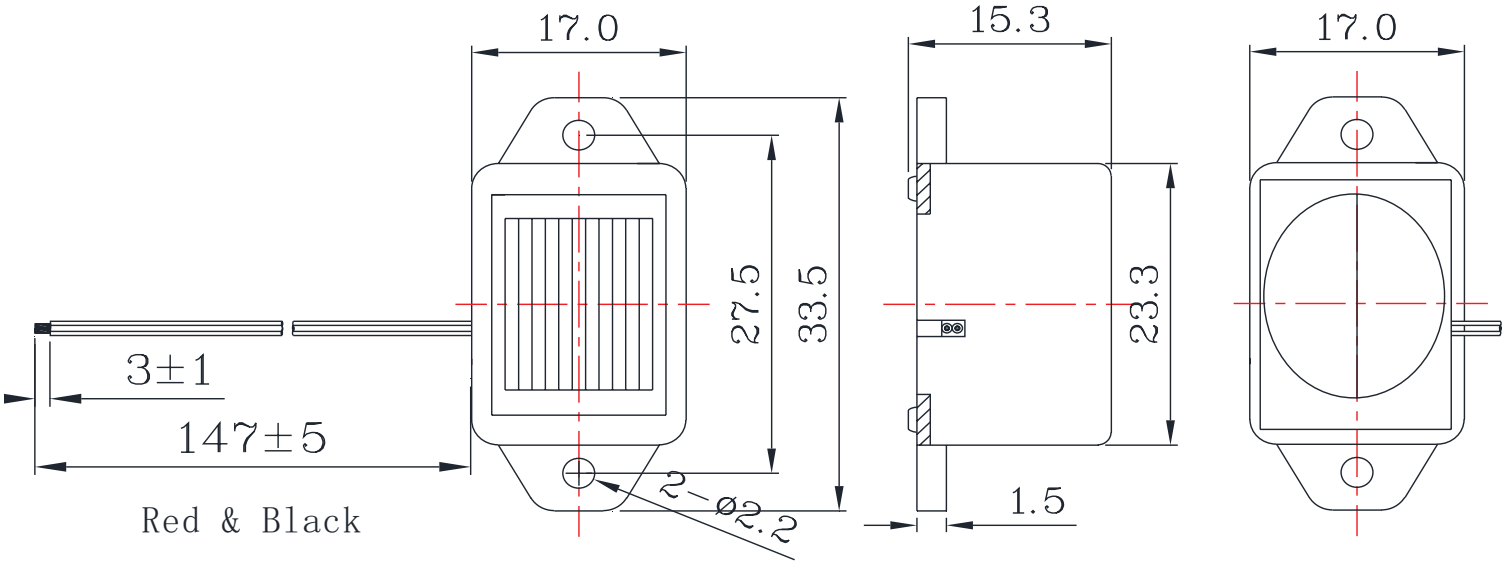

PERFORMANCE CURVES

Voltage vs. Sound Pressure Level
at 30 cm, 25°C

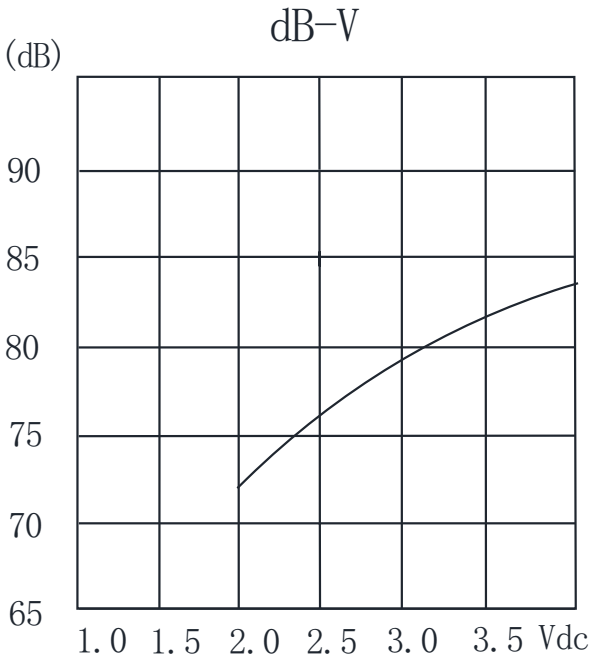

Voltage vs. Current Consumption
at 25°C

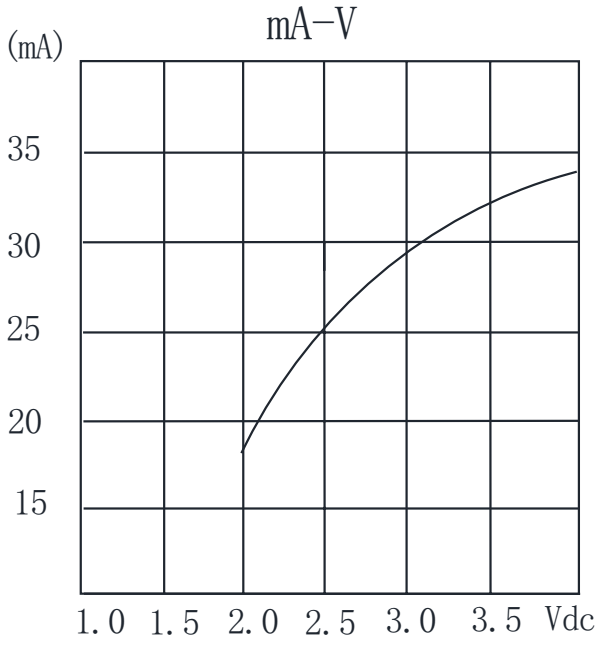

REVISION HISTORY

rev.	description	date
1.0	initial release	11/12/2007
1.01	modified design	08/21/2023

The revision history provided is for informational purposes only and is believed to be accurate.

CUI Devices offers a one (1) year limited warranty. Complete warranty information is listed on our website.

CUI Devices reserves the right to make changes to the product at any time without notice. Information provided by CUI Devices is believed to be accurate and reliable. However, no responsibility is assumed by CUI Devices for its use, nor for any infringements of patents or other rights of third parties which may result from its use.

CUI Devices products are not authorized or warranted for use as critical components in equipment that requires an extremely high level of reliability. A critical component is any component of a life support device or system whose failure to perform can be reasonably expected to cause the failure of the life support device or system, or to affect its safety or effectiveness.