CUDEVICES



# **MODEL:** CMS-20103-078SP | **DESCRIPTION:** SPEAKER

## FEATURES

- 8 ohm rated impedance
- 0.7 W rated power
- 500 Hz resonance frequency

RoHS

## SPECIFICATIONS

| parameter | conditions/description | min | typ | max | units |
|---|---|---|---|---|---|
| input power | max power: IEC-60268-5, filter 60 seconds on, 120 seconds off, 10 cycles (room temp) | | 0.7 | 1.0 | W |
| impedance | at 2.0 kHz | 6.8 | 8 | 9.2 | Ω |
| resonant frequency (Fo) | at 1.0 V, in free air | 440 | 550 | 660 | Hz |
| frequency response | | Fo | | 20,000 | Hz |
| sound pressure level | at 0.7 W, 10 cm, avg at 1.0 kHz in 1 cc closed box | 87 | 90 | 93 | dB |
| distortion | at 1.0 kHz, rated power, 0.1 m, in 1 cc closed box | | | 10 | % |
| buzz, rattle, etc. | must be normal at sine wave, Fo~10 kHz, in 1 cc closed box | | | 2.36 | V |
| polarity | cone moves forward w/ positive dc current to "+" terminal | | | | |
| dimensions | 20.0 x 10.0 x 3.0 | | | | mm |
| magnet | Nd-Fe-B | | | | |
| frame material | PPA | | | | |
| cone material | PEEK | | | | |
| terminal | solder pads | | | | |
| weight | | | 1.7 | | g |
| operating temperature | | -30 | | 70 | °C |
| storage temperature | | -40 | | 80 | °C |
| hand soldering | for maximum 3 seconds | 370 | 380 | 390 | °C |
| RoHS | yes | | | | |

Notes: 1. All specifications measured at 5~35°C, humidity at 45~85%, under 86~106 kPa pressure, unless otherwise noted.

## MECHANICAL DRAWING

units: mm
tolerance: ±0.5 mm

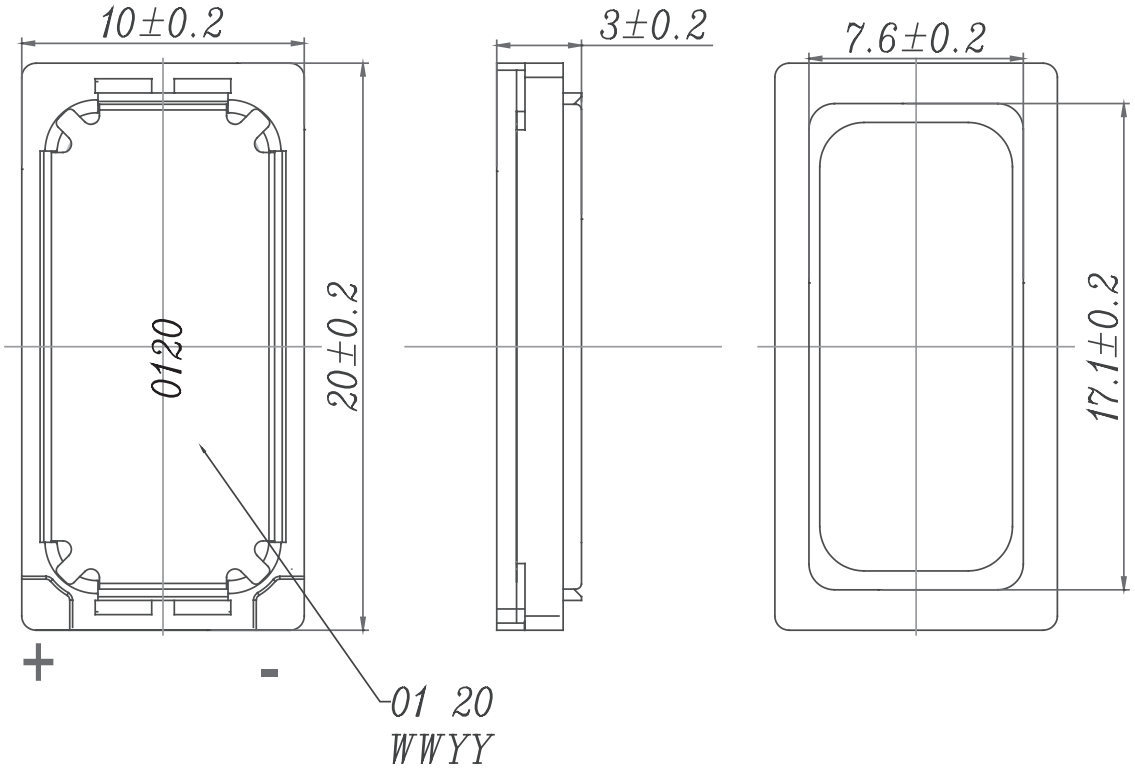

## RESPONSE CURVES

### Frequency Response Curve

Test Conditions: 0.7 W / 10 cm in 1 cc closed box

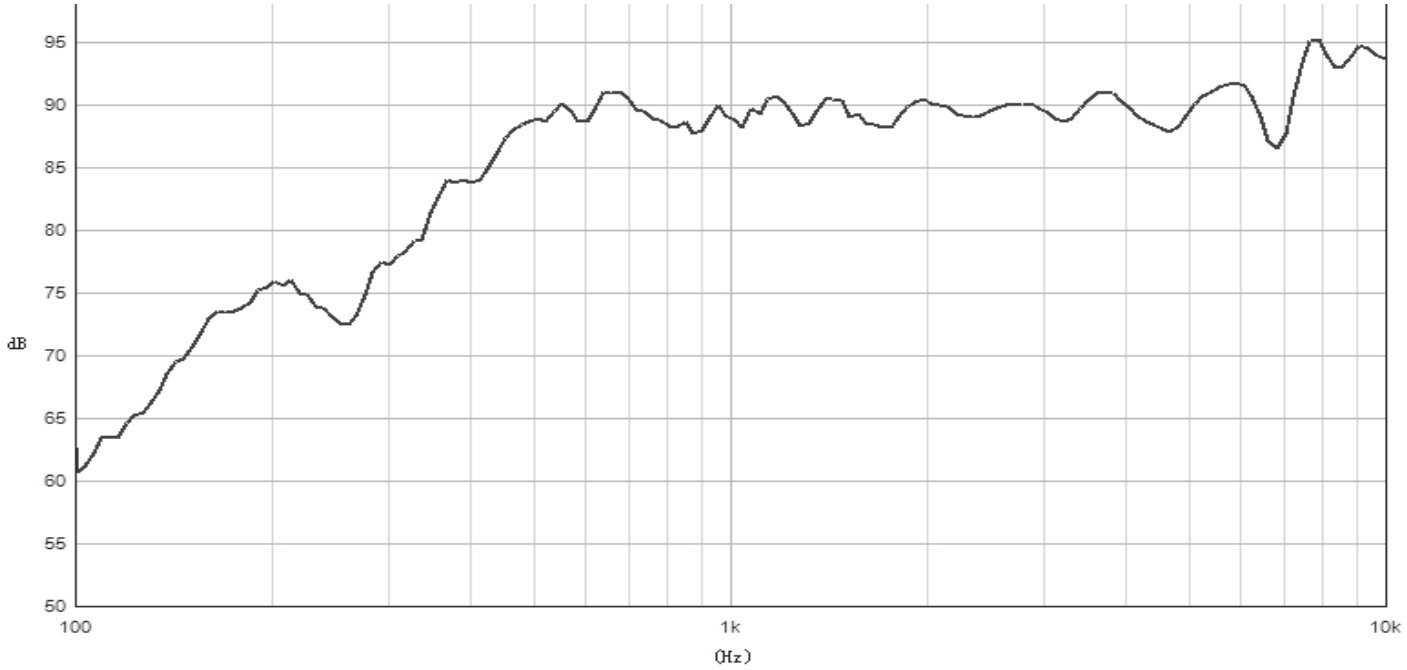


### Total Harmonic Distortion Curve

Test Conditions: 0.7 W / 10 cm in 1 cc closed box

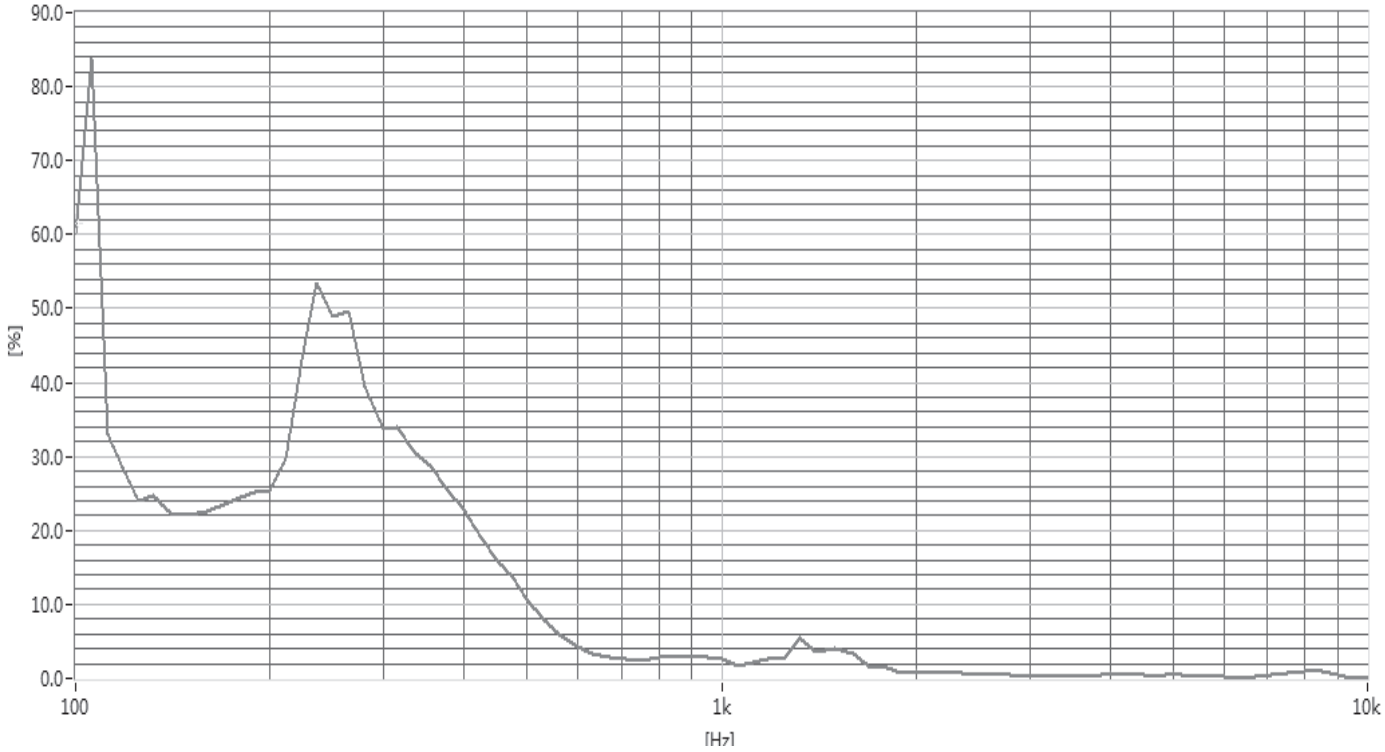

## PACKAGING

units: mm

Tray Size: 290 x 220 mm
Tray QTY: 100 pcs per tray
Carton Size: 310 x 240 x 270 mm
Carton QTY: 2,500 pcs per carton

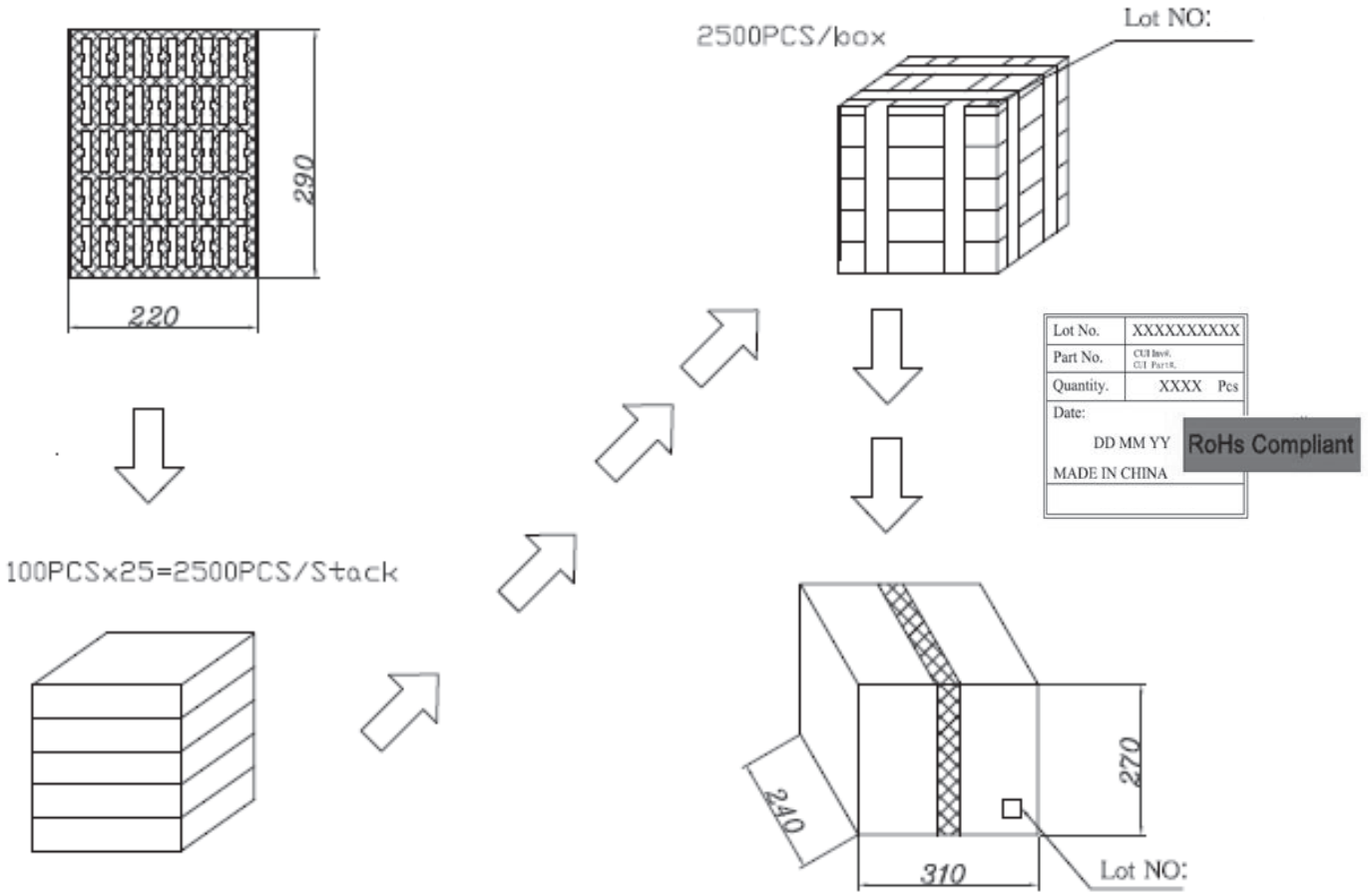

## REVISION HISTORY

| rev. | description | date |
|---|---|---|
| 1.0 | initial release | 06/08/2020 |
| 1.01 | added date code marking | 01/04/2021 |
| 1.02 | logo, datasheet style update | 08/05/2022 |

The revision history provided is for informational purposes only and is believed to be accurate.

CUI Devices offers a one (1) year limited warranty. Complete warranty information is listed on our website.

CUI Devices reserves the right to make changes to the product at any time without notice. Information provided by CUI Devices is believed to be accurate and reliable. However, no responsibility is assumed by CUI Devices for its use, nor for any infringements of patents or other rights of third parties which may result from its use.

CUI Devices products are not authorized or warranted for use as critical components in equipment that requires an extremely high level of reliability. A critical component is any component of a life support device or system whose failure to perform can be reasonably expected to cause the failure of the life support device or system, or to affect its safety or effectiveness.