MODEL: CBLT-UA-MUB-1 | DESCRIPTION: USB CABLE

FEATURES

- USB 2.0
- type A male to micro type B male
- 1 meter
- TPE jacket
- halogen free

SPECIFICATIONS

parameter	conditions/description	min	typ	max	units
rated voltage			20		Vdc
rated current				2	A
conductor resistance				5	Ω
insulation resistance	at 300 Vdc	10			MΩ
operating temperature		-20		80	°C
storage temperature		-20		80	°C
flammability rating	UL94V-0				
RoHS	yes				

MECHANICAL DRAWING

units: mm
tolerance:
X.X ±0.5 mm
X.XX ±0.3 mm
X.XXX ±0.1 mm
unless otherwise noted

critical dimension: *

ITEM	DESCRIPTION	MATERIAL	PLATING/COLOR
1	cable	no UL OD: 4.7±0.15 mm TPE	black
2	connector 1	USB 2.0 Type A	insulator: white shell: nickel term.: gold flash
3	connector 2	USB 2.0 Micro Type B	insulator: black shell: nickel term.: gold flash
4	over mold	TPE	black

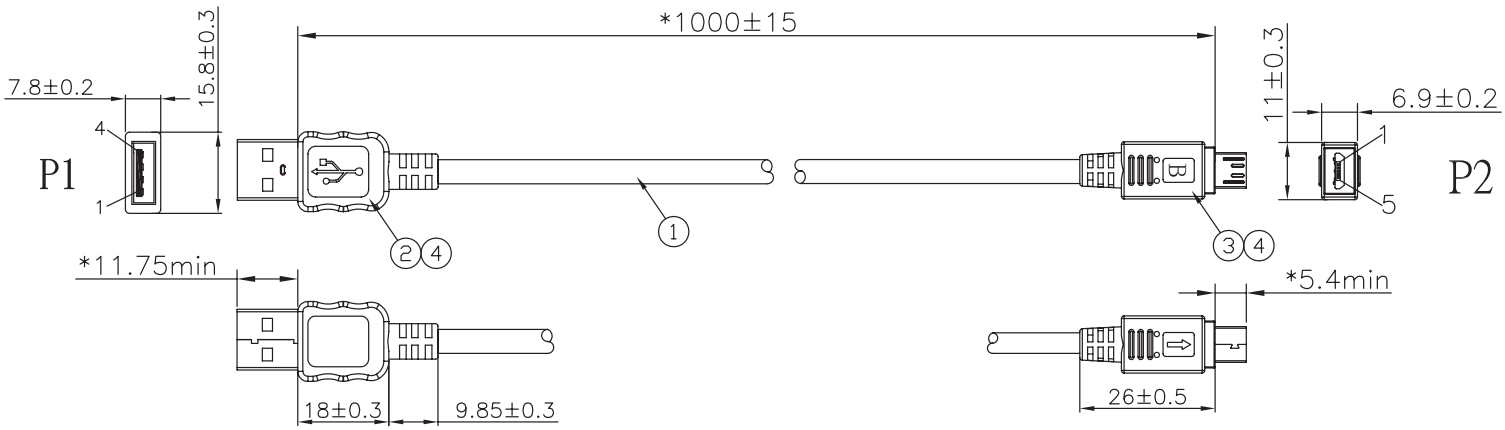

WIRE LIST

P1		P2	
1		1	RED
2		2	WHITE
3		3	GREEN
4		5	BLACK
SHELL		SHELL	DRAIN+BRAID

PACKAGING

units: mm

Carton Size: 546 x 355 x 186 mm
Carton QTY: 100 pcs

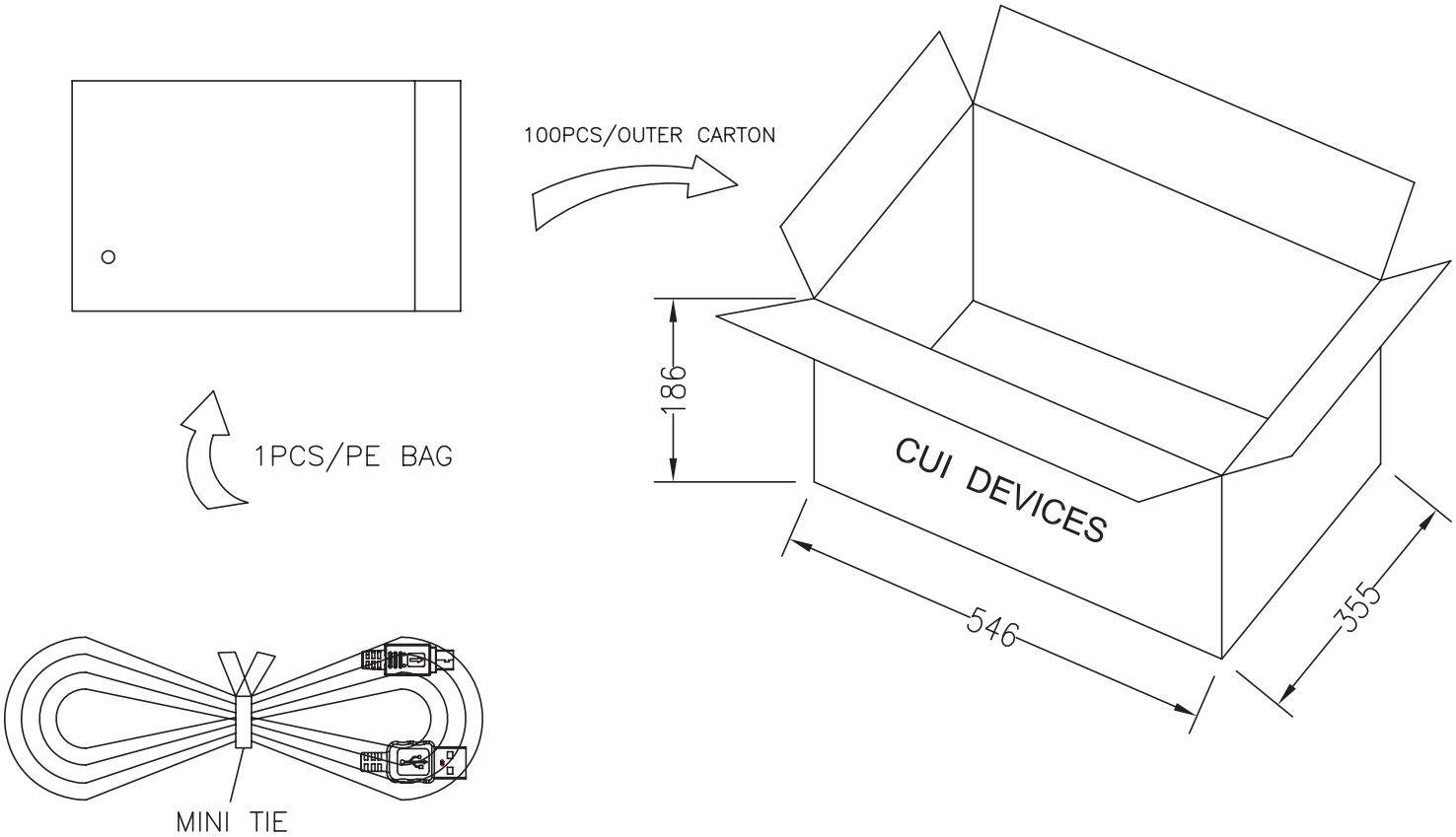

REVISION HISTORY

rev.	description	date
1.0	initial release	12/21/2018
1.01	updated datasheet	03/11/2019
1.02	brand update	02/14/2020
1.03	modified design, changed factory	01/28/2022
1.04	logo, datasheet style update	08/05/2022

The revision history provided is for informational purposes only and is believed to be accurate.

CUI Devices offers a one (1) year limited warranty. Complete warranty information is listed on our website.

CUI Devices reserves the right to make changes to the product at any time without notice. Information provided by CUI Devices is believed to be accurate and reliable. However, no responsibility is assumed by CUI Devices for its use, nor for any infringements of patents or other rights of third parties which may result from its use.

CUI Devices products are not authorized or warranted for use as critical components in equipment that requires an extremely high level of reliability. A critical component is any component of a life support device or system whose failure to perform can be reasonably expected to cause the failure of the life support device or system, or to affect its safety or effectiveness.