MODEL: CUSA-TR80-18-2400-TH | DESCRIPTION: ULTRASONIC SENSOR

FEATURES

- aluminium can
- open type
- combination unit: receiver & transmitter
- sensitivity -68 dBV
- detectable range 18 meters

RoHS

SPECIFICATIONS

parameter	conditions/description	min	typ	max	units
type	transmitter/receiver				
operating voltage	at 39 kHz			150	Vp-p
frequency		38	39	40	kHz
sensitivity		-68			dBV/µMbar
sound pressure level	at 10 V, 30 cm, sine wave	115			dB
directivity			80		degree
capacitance	at 1 kHz	1,920	2,400	2,880	pF
detectable range		0.2		18	m
response time				1.6	ms
dimensions	Ø16.0 x 12.0				mm
material	aluminum				
terminal	pins (iron with tin plating)				
weight			2.31		g
operating temperature		-20		70	°C
RoHS	yes				

SOLDERABILITY

parameter	conditions/description	min	typ	max	units
wave soldering				250	°C

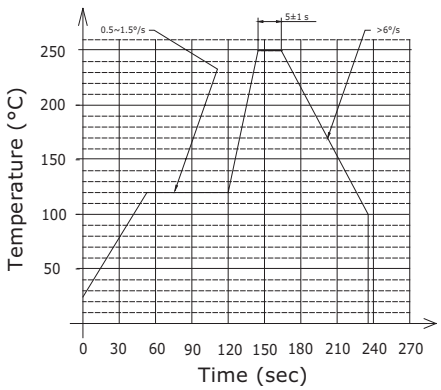

MECHANICAL DRAWING

units: mm

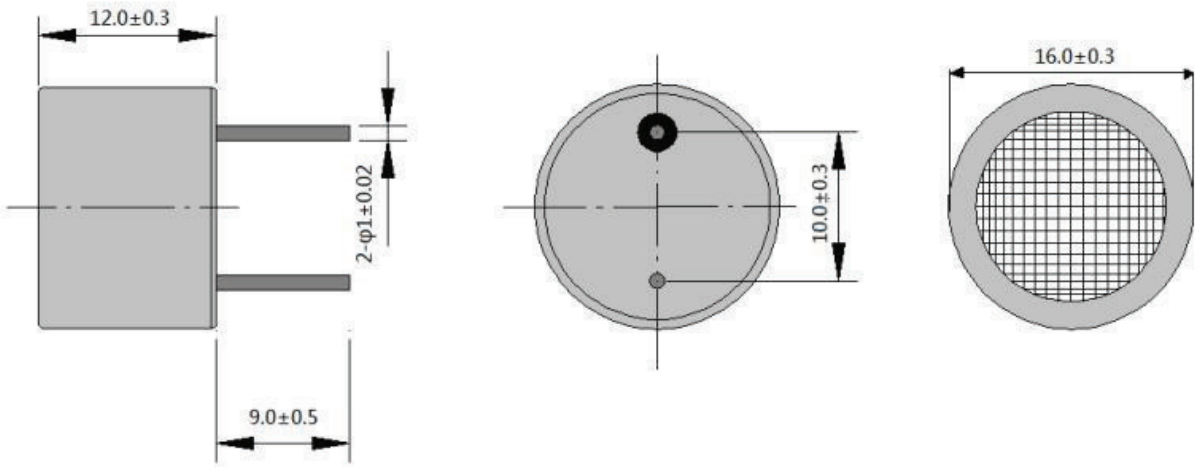

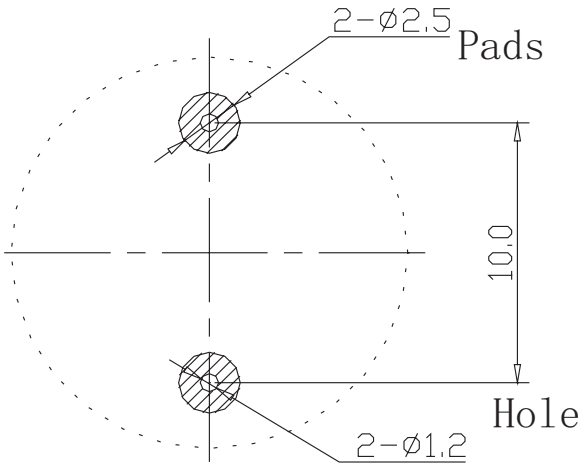

Recommended PCB Layout
Top View

BEAM PATTERNS

SPL vs. Frequency (Transmitter)

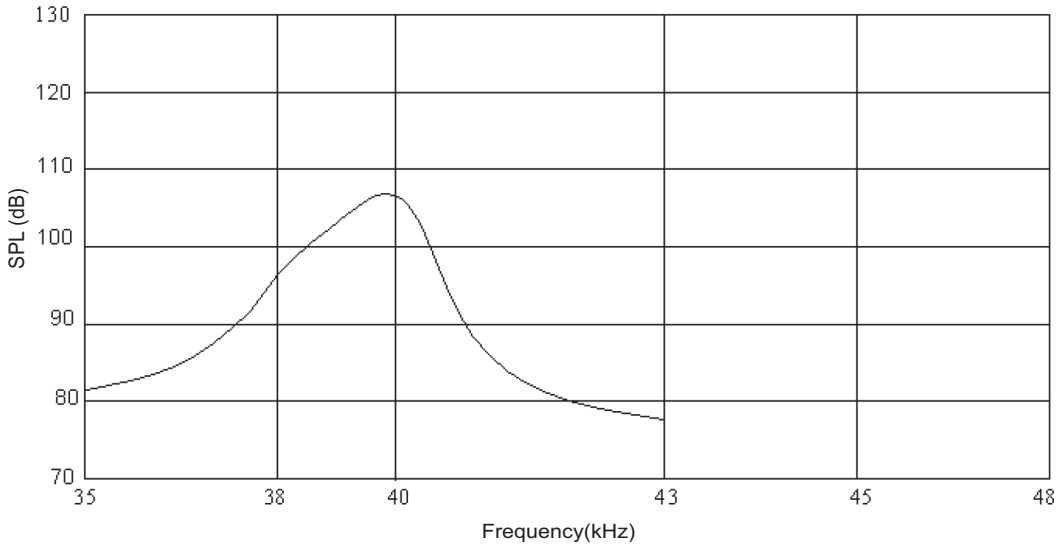

Sensitivity vs. Frequency (Receiver)

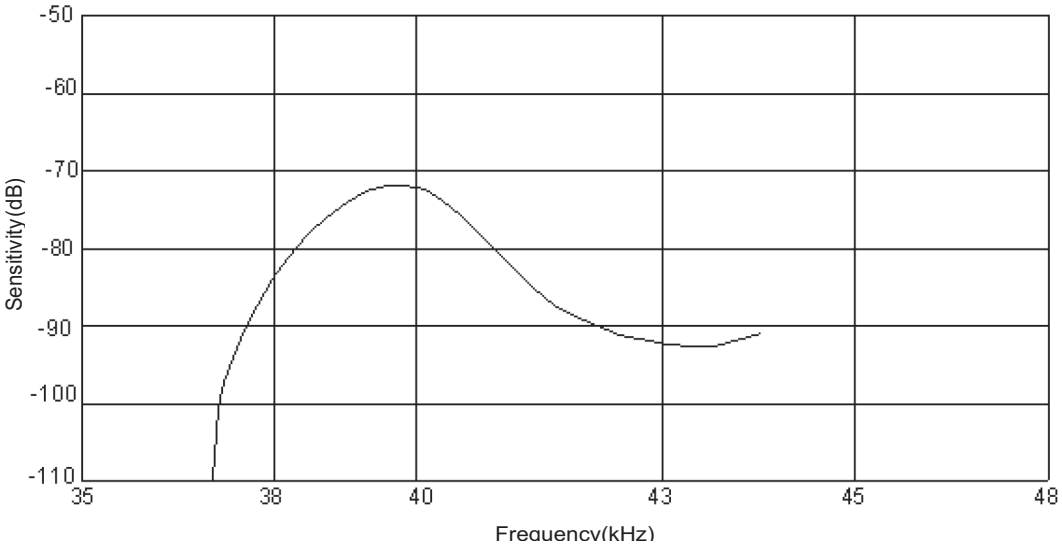

Directivity

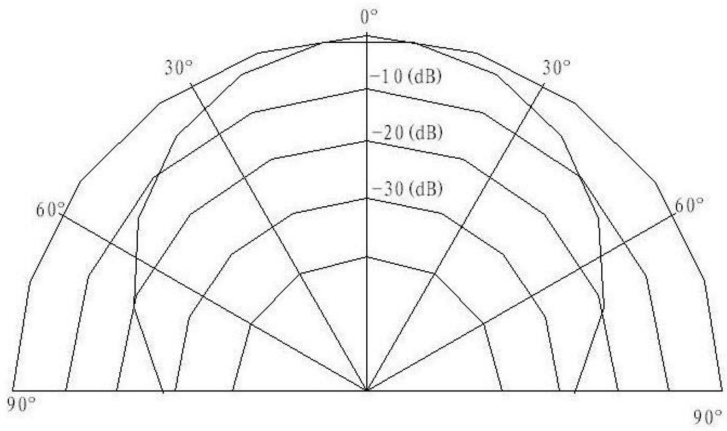

PACKAGING

units: mm

Tray Size: 240 x 160 x 30 mm
Tray QTY: 50 pcs per tray
Carton Size: 480 x 280 x 320 mm
Carton QTY: 2,000 pcs per carton

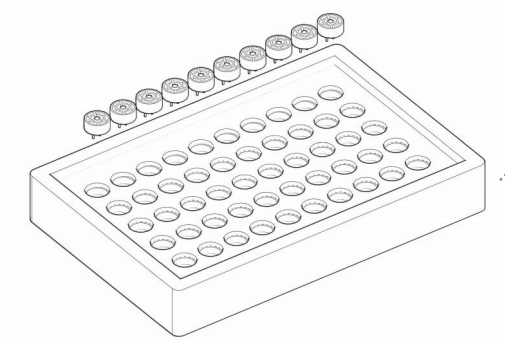

50PCS/BOX
BOX SIZE:24*16*3CM

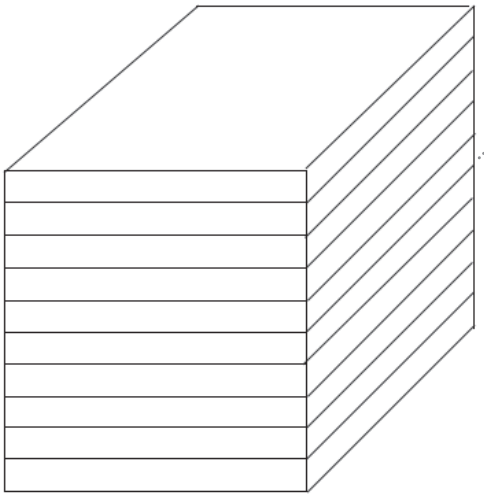

10BOXES/STACK, TOTAL 500PCS
STACK SIZE:24*16*24CM

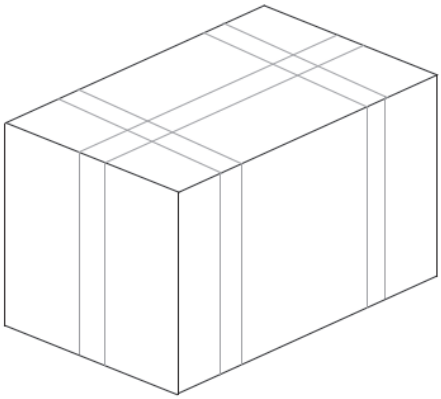

2000PCS/CARTON
CARTON SIZE:48*28*32CM

REVISION HISTORY

rev.	description	date
1.0	initial release	12/02/2020
1.01	logo, datasheet style update	08/05/2022

The revision history provided is for informational purposes only and is believed to be accurate.

CUI Devices offers a one (1) year limited warranty. Complete warranty information is listed on our website.

CUI Devices reserves the right to make changes to the product at any time without notice. Information provided by CUI Devices is believed to be accurate and reliable. However, no responsibility is assumed by CUI Devices for its use, nor for any infringements of patents or other rights of third parties which may result from its use.

CUI Devices products are not authorized or warranted for use as critical components in equipment that requires an extremely high level of reliability. A critical component is any component of a life support device or system whose failure to perform can be reasonably expected to cause the failure of the life support device or system, or to affect its safety or effectiveness.

cuidevices.com