CUDEVICES



# **MODEL:** CPI-4232-92SST | **DESCRIPTION:** PIEZO BUZZER INDICATOR

## FEATURES

- slow tone
- high SPL
- screw terminals

RoHS

## SPECIFICATIONS

| parameter | conditions/description | min | typ | max | units |
|---|---|---|---|---|---|
| rated voltage | | | 12 | | Vdc |
| operating voltage | | 7 | | 18 | Vdc |
| current consumption | at 7 Vdc<br>at 12 Vdc<br>at 18 Vdc | | | 8<br>16<br>32 | mA<br>mA<br>mA |
| rated frequency | | 2,400 | 2,900 | 3,400 | Hz |
| sound pressure level | at 60 cm, 7 Vdc<br>at 60 cm, 12 Vdc<br>at 60 cm, 18 Vdc | 80<br>92<br>95 | | | dB<br>dB<br>dB |
| tone | slow pulse at rated voltage (1.2 ±20% Hz) | | | | |
| dimensions | Ø42.5 x 32.0 | | | | mm |
| weight | | | | 39.26 | g |
| material | NYLON (UL94V-0) | | | | |
| terminal | screw terminals (tin plating) | | | | |
| operating temperature | | -30 | | 85 | °C |
| storage temperature | | -40 | | 85 | °C |
| washable | no | | | | |
| RoHS | yes | | | | |

Notes: 1. All specifications measured at 5~35°C, humidity at 45~85%, under 86~106 kPa pressure, unless otherwise noted.

## SOLDERABILITY

| parameter | conditions/description | min | typ | max | units |
|---|---|---|---|---|---|
| hand soldering | maximum 2 seconds | 330 | | 380 | °C |

## MECHANICAL DRAWING

units: mm
tolerance: ±0.5 mm

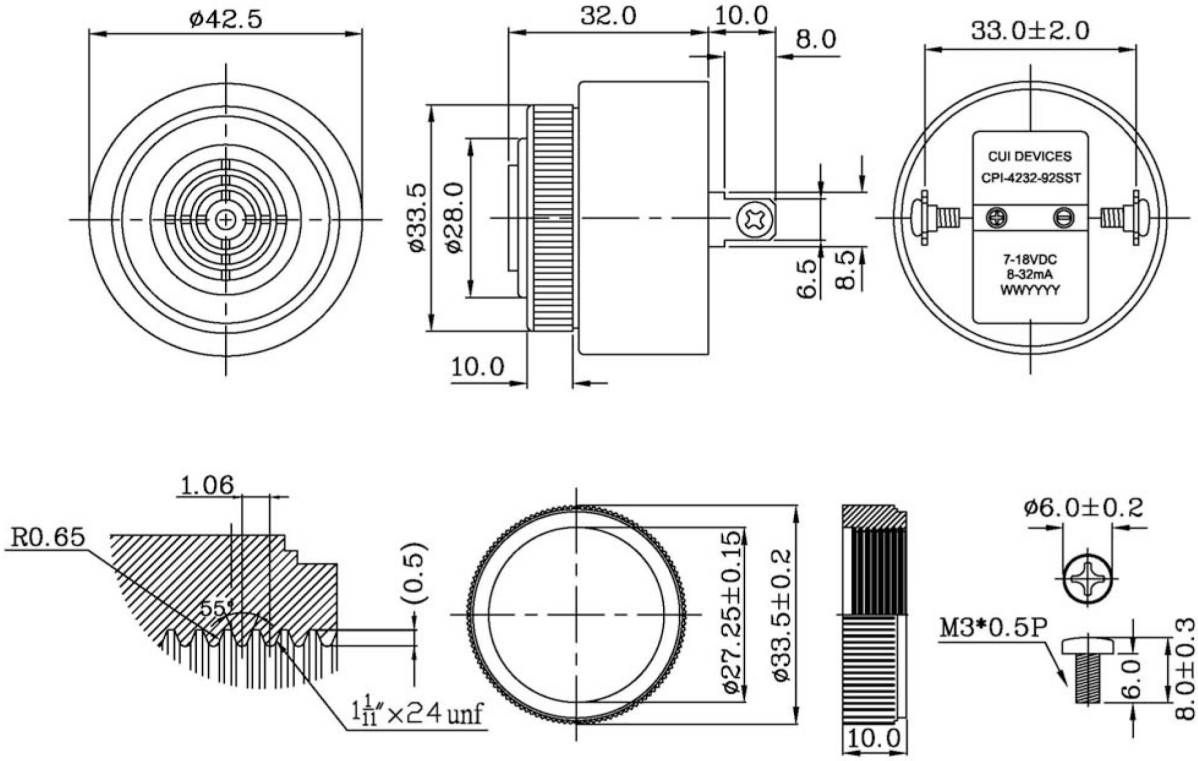


## PERFORMANCE CURVES

Voltage vs. Sound Pressure Level at 60 cm

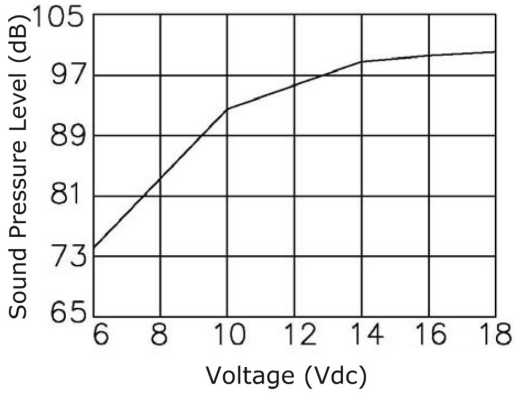


Voltage vs. Current Consumption

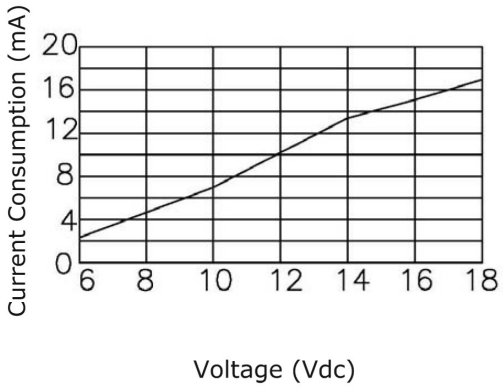

## PACKAGING

units: mm

Carton Size: 550 x 330 x 290 mm
Carton QTY: 400 pcs per carton

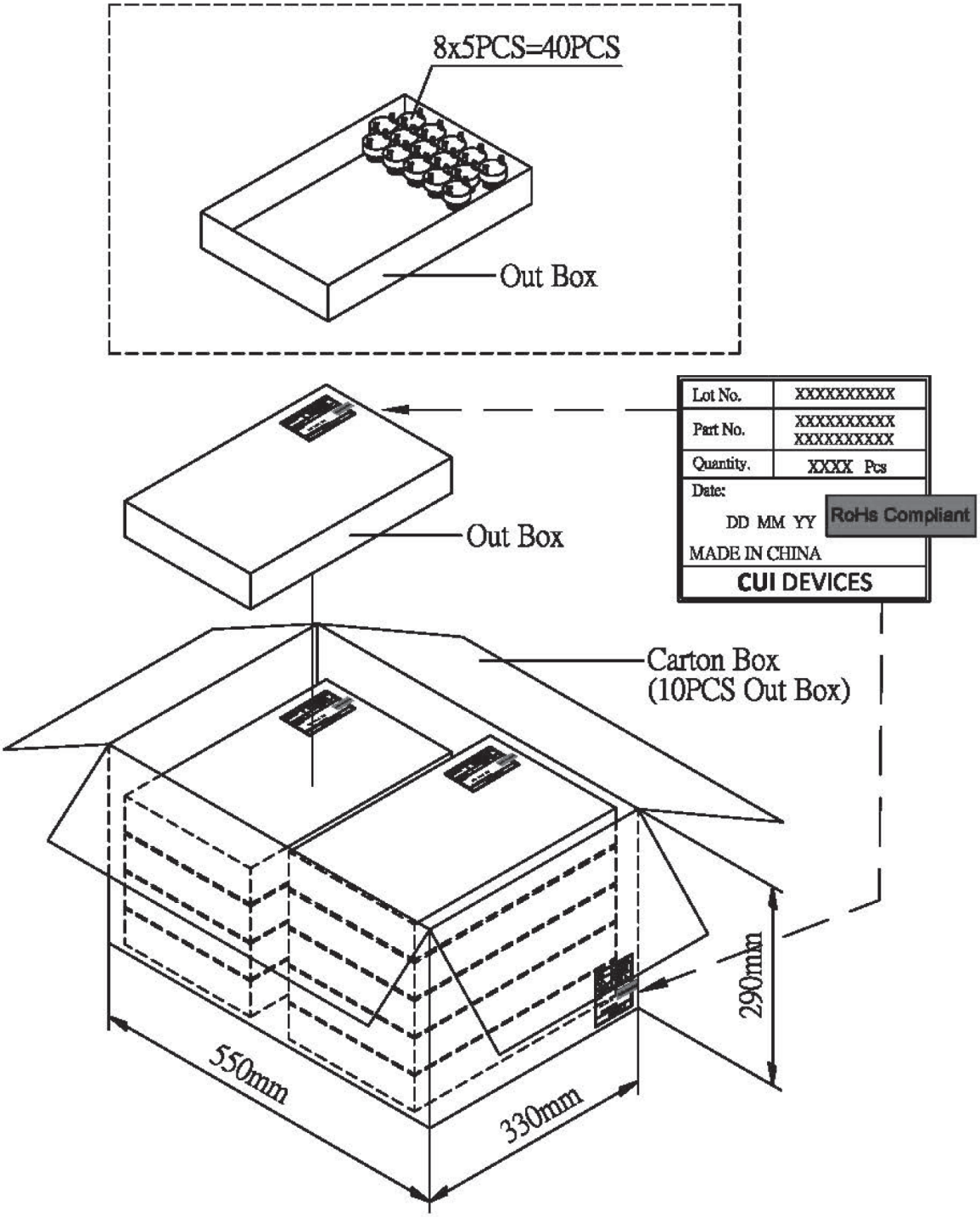

## REVISION HISTORY

| rev. | description | date |
|---|---|---|
| 1.0 | initial release | 12/12/2019 |
| 1.01 | logo, datasheet style update | 08/05/2022 |

The revision history provided is for informational purposes only and is believed to be accurate.

CUI Devices offers a one (1) year limited warranty. Complete warranty information is listed on our website.

CUI Devices reserves the right to make changes to the product at any time without notice. Information provided by CUI Devices is believed to be accurate and reliable. However, no responsibility is assumed by CUI Devices for its use, nor for any infringements of patents or other rights of third parties which may result from its use.

CUI Devices products are not authorized or warranted for use as critical components in equipment that requires an extremely high level of reliability. A critical component is any component of a life support device or system whose failure to perform can be reasonably expected to cause the failure of the life support device or system, or to affect its safety or effectiveness.