CUDEVICES

MODEL: CMM-4030D-261-I2S-TR | **DESCRIPTION:** MEMS MICROPHONE

DISCONTINUED

FEATURES

- I²S technology
- digital
- omnidirectional

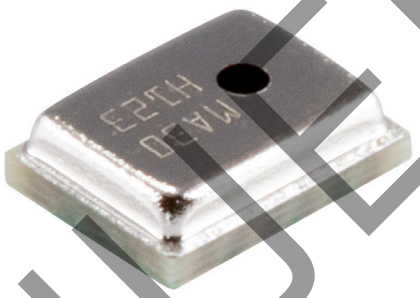

RoHS

ELECTRICAL

parameter	conditions/description	min	typ	max	units
directivity	omnidirectional				
sensitivity (S)	at 1 kHz, 1 Pa	-27	-26	-25	dB FS
supply voltage (V_{DD})		1.6	1.8	3.6	V
current consumption (I_{DD})	at normal mode at low power mode		0.75 0.40	1.0	mA mA
clock frequency (F_{CLOCK})	at normal mode at low power mode	1.0 150	3.0	4.0 800	MHz kHz
sensitivity reduction	no change across voltage range				
frequency (f)		100		10,000	Hz
signal to noise ratio (S/N)	at 20 kHz bandwidth (A-weighted)		59		dBA
total harmonic distortion (THD)	at 94 dB SPL, 1 kHz, Rload > 2 kΩ		0.1		%
acoustic overload point (AOP)	at 94 dB SPL, 1 kHz, Rload > 2 kΩ		124		dB SPL
power supply rejection (PSR)			-72		dB FS(A)
power-up time			6	20	ms

DIGITAL INTERFACE

parameter	conditions/description	min	typ	max	units
low voltage input (L/R, WS, SCK) (VIL)		0		0.25xV_{DD}	V
high voltage input (L/R, WS, SCK) (VIH)		0.7xV_{DD}		V_{DD}	V
high voltage output (SD) (VOL)		0.1xV_{DD}		0.3xV_{DD}	V
high voltage output (SD) (VOH)		0.7xV_{DD}		0.9xV_{DD}	V

Notes: 1. All specifications measured at 25°C, humidity at 45±5%, L/R pins grounded, V_{DD} = 1.8 V, F_{CLOCK} = 3.072 MHz, unless otherwise noted.

TIMING CHARACTERISTICS

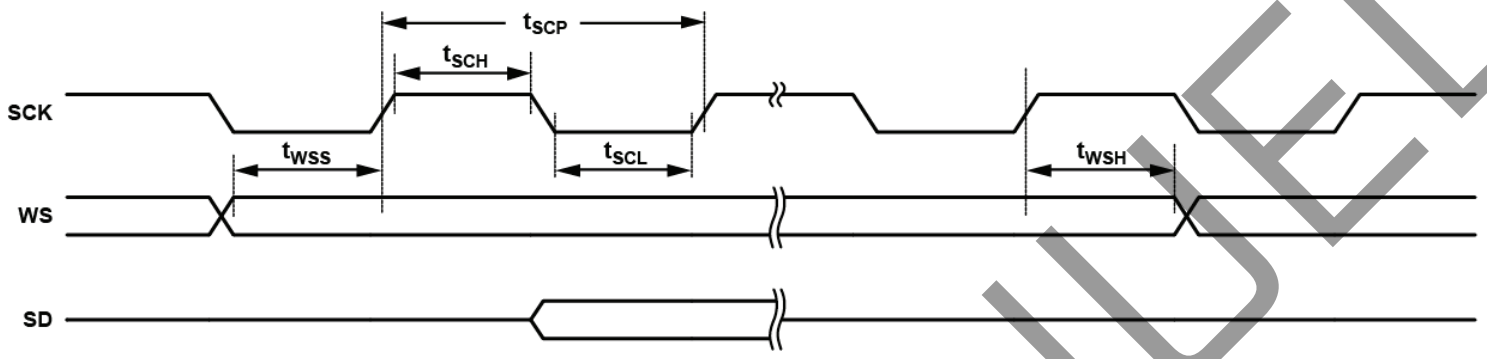

Parameter	Description	Min	Normal	Max.	Unit
t_{SCH}	SCK high	--	50	--	ns
t_{SCL}	SCK low	--	50	--	ns
t_{SCP}	SCK period	--	325	--	ns
f_{SCK}	SCK frequency	--	3.072	--	MHz
t_{WSS}	WS setup	--	0	--	ns
t_{WSH}	WS hold	--	20	--	ns
f_{WS}	WS frequency	--	48	--	kHz

DISCONTINUED

RECOMMENDED INTERFACE CIRCUIT

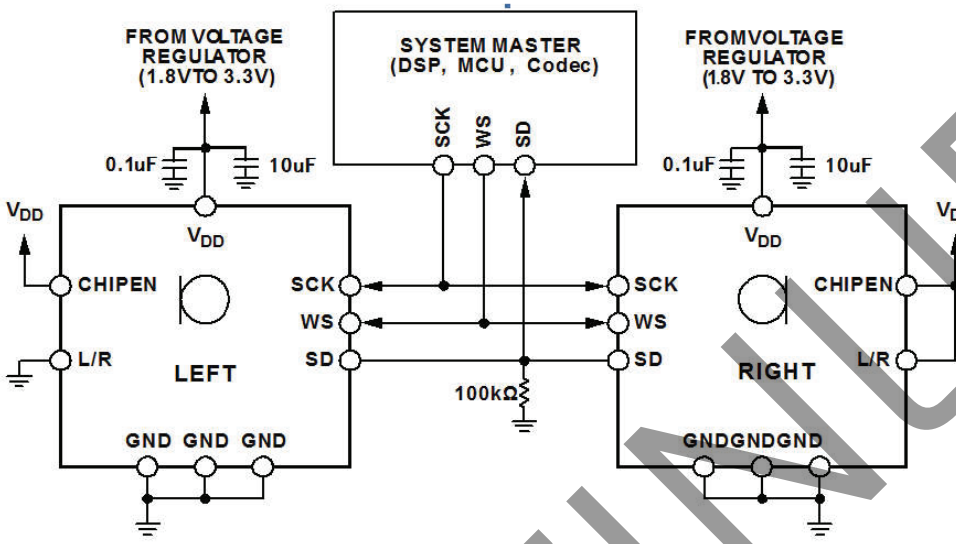

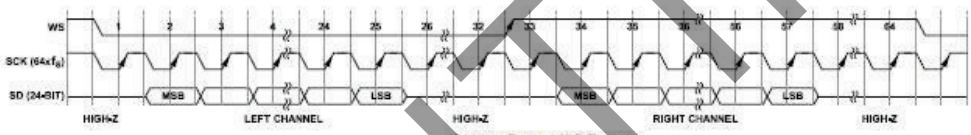

Stereo Output I2S Format

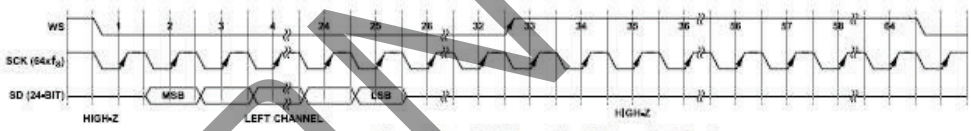

Mono Output I2S Format Left Channel (L/R=0)

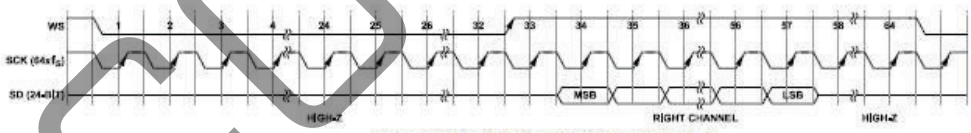

Mono Output I2S Format Right Channel (L/R= 1)

I²S DATA INTERFACE

The serial data is in slave mode I²S format, which has 24-bit depth in a 32 bit word. In a stereoframe there are 64 SCK cycles, or 32 SCK cycles per data-word. When L/R=0, the output data in the left channel, while L/R=Vdd, data in the right channel. The output data pin (SD) is tri-stated after the LSB is output so that another microphone can drive the common data line.

DATA WORD LENGTH

The output data-word length is 24 bits per channel. The Mic must always have 64 clock cycles for every stereo data-word(f_{SCK}=64 x f_{WS}).

DATA WORD FORMAT

The default data format is I²S, MSB-first. In this format, the MSB of each word delayed by one SCK cycle from the start of each half-frame.

DISCONTINUED

DISCONTINUED

ENVIRONMENTAL

parameter	conditions/description	min	typ	max	units
operating temperature		-20		70	°C
storage temperature	in packaging	-40		100	°C
RoHS	yes				

MECHANICAL

parameter	conditions/description	min	typ	max	units
dimensions	4.0 x 3.0 x 1.25				mm
acoustic port	top				
terminals	surface mount				
weight			0.03		g

MECHANICAL DRAWING

units: mm
tolerance:
length, width, height: ±0.10 mm
acoustic port: ±0.05mm
unless otherwise specified: ±0.15 mm

TERMINAL CONNECTIONS			
TERM.	SYM	FUNCTION	DESCRIPTION
1	GND	ground	Connect to ground on the PCB.
2	N/C	--	Do not connect
3	WS	input	Serial Data-Word Select for I²S Interface.
4	CHIPEN	input	Microphone enable. When set low(ground), the microphone is disabled and put in power-down mode. When set high (VDD), the microphone is enabled.
5	L/R	input	Left/Right Channel Select. When set low, the microphone outputs its signal in the left channel of the I²S frame; when set high, the microphone outputs its signal in the right channel.
6	SCK	input	Serial Data Clock for I²S Interface.
7	SD	output	Serial Data Output for I²S Interface. This pin tristates when not actively driving the appropriate output channel. The SD trace should have a 100 kΩ pull-down resistor to discharge the line during the time that all microphones on the bus have tristated their outputs.
8	VDD	power	1.8 to 3.3 V. This pin should be decoupled to Pin 1 with a 0.1 µF capacitor and a 10 µF capacitor.

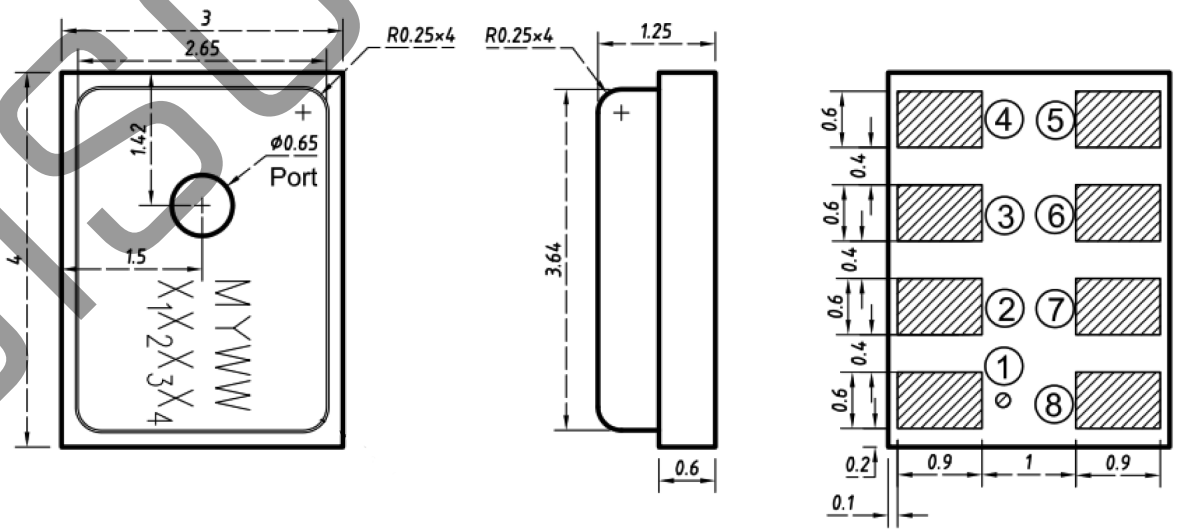

MECHANICAL DRAWING (CONTINUED)

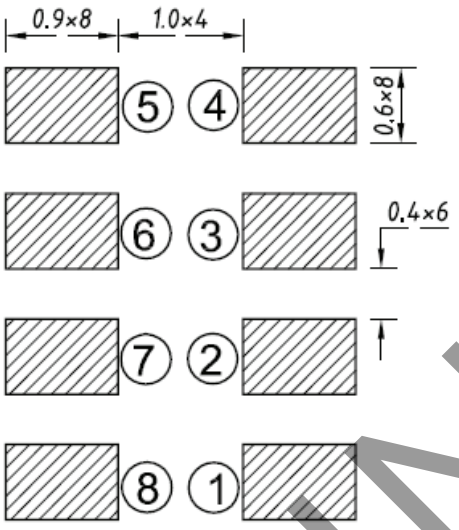

Recommended PCB Layout
Top View

FREQUENCY RESPONSE CURVE

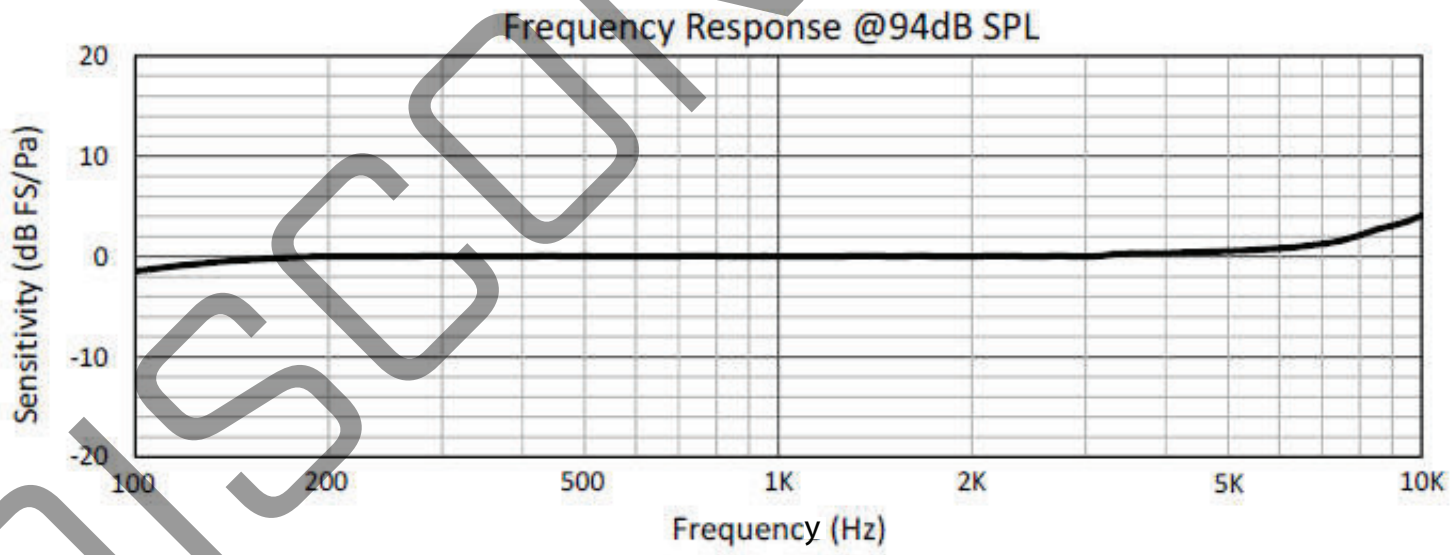

DISCONTINUED

SOLDERABILITY

parameter	conditions/description	min	typ	max	units
reflow soldering[2]	see reflow profile			260	°C

Note: 2. Not recommended to exceed 3 reflow cycles.

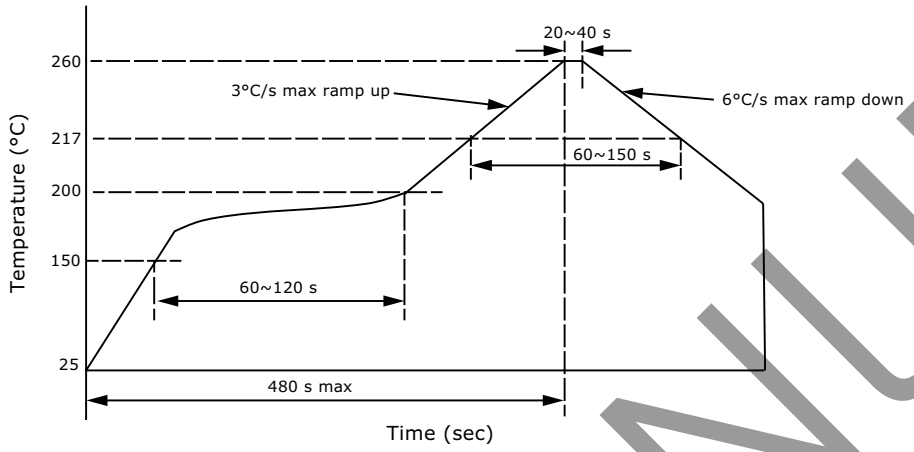

HANDLING RECOMMENDATIONS

1. Not recommnended to blow air heavily over acoustic port as debris could impact mic function.
2. Not suitable for wash process after reflow.
3. Not recommended to brush board with or without solvents after reflow process.
4. Not recommended to directly expose to ultrasonic processing or cleaning.
5. Not recommended to inserty any object in port of device at any time.
6. Not recommended to apply over 30 psi of air pressure into the port hole.
7. Not recommended to pull a vacuum over port hole.
8. Not recommended to apply a vacuum when repackaging into sealed bag a rate faster than 0.5 atm/sec.
9. Not recommended to clean table or carried plate with air guarding system that could induce particle floating inside mic.

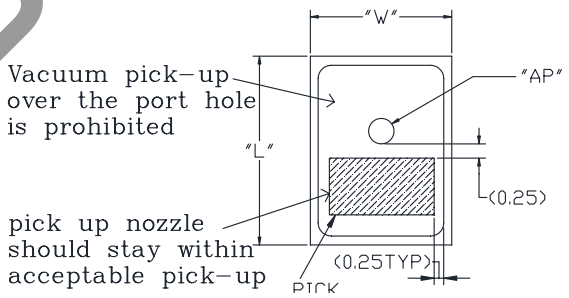

Recommended Vacuum Nozzle Pickup
Top View

DISCONTINUED

PACKAGING

parameter	conditions/description	min	typ	max	units
MSL	Class 2a				
reel size	Ø7 inches				
reel QTY[3]	1,100 pcs per reel				
carton size	310 x 210 x 165 mm				
carton QTY	5,500 pcs				

Note: 3. The leader tape of the reel, and the beginning tape fixed into the reel center, will leave 25 blank cavities each.

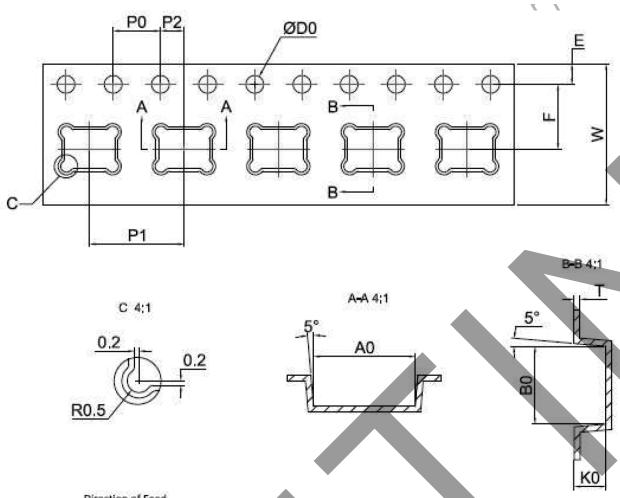

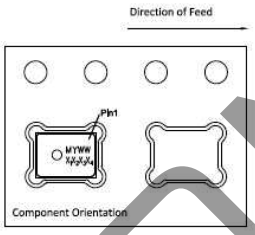

Item	W	E	F	ØD0	K0
DIM(mm)	12.0±0.30	1.75±0.10	5.50±0.10	1.50+0.10/-0	1.25±0.10
Item	P0	10P0	P1	A0	B0
DIM(mm)	4.0±0.10	40.0±0.20	8.0±0.10	3.80±0.10	2.95±0.10
Item	P2	T	--	--	--
DIM(mm)	2.0±0.10	0.25±0.05	--	--	--

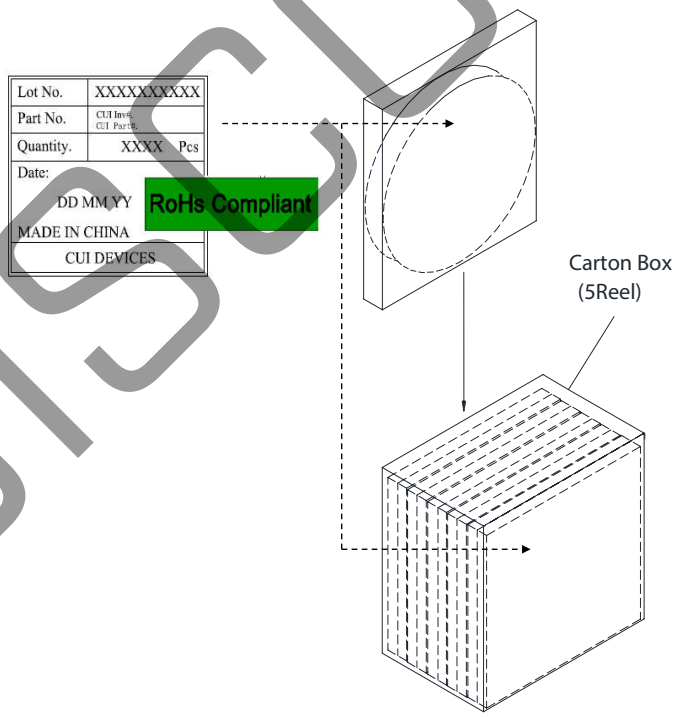

DISCONTINUED

REVISION HISTORY

rev.	description	date
1.0	initial release	08/12/2020
1.01	updated datasheet	11/01/2021
1.02	logo, datasheet style update	08/05/2022

The revision history provided is for informational purposes only and is believed to be accurate.

DISCONTINUED

CUI Devices offers a one (1) year limited warranty. Complete warranty information is listed on our website.

CUI Devices reserves the right to make changes to the product at any time without notice. Information provided by CUI Devices is believed to be accurate and reliable. However, no responsibility is assumed by CUI Devices for its use, nor for any infringements of patents or other rights of third parties which may result from its use.

CUI Devices products are not authorized or warranted for use as critical components in equipment that requires an extremely high level of reliability. A critical component is any component of a life support device or system whose failure to perform can be reasonably expected to cause the failure of the life support device or system, or to affect its safety or effectiveness.