CUDEVICES

MODEL: CMC-2242PBL-A | **DESCRIPTION:** ELECTRET CONDENSER MICROPHONE

FEATURES

- omnidirectional
- 6.0 mm diameter
- solder pins

RoHS

SPECIFICATIONS

parameter	conditions/description	min	typ	max	units
directivity	omnidirectional				
sensitivity (S)	f = 1 kHz, 1 Pa, 0 dB = 1 V/Pa	-45	-42	-39	dB
standard operating voltage (Vs)			2		Vdc
max operating voltage				10	Vdc
output impedance (Zout)	f = 1 kHz, 1 Pa		2.2		kΩ
sensitivity reduction (ΔS-Vs)	f = 1 kHz, 1 Pa, Vs = 2.0 ~ 1.5 Vdc		-3		dB
frequency (f)		100		20,000	Hz
current consumption (I_{DSS})	Vs = 2.0 Vdc, RL = 2.2 kΩ			0.5	mA
signal to noise ratio (S/N)	f = 1 kHz, 1 Pa, A-weighted		58		dBA
dimensions	Ø6.0 x 2.2				mm
material	AL				
terminal	solder pins (gold plating)				
weight				0.15	g
operating temperature		-20		70	°C
storage temperature		-20		70	°C
RoHS	yes				

Notes:
1. We use the "Pascal (Pa)" indication of sensitivity as per the recomendation of I.E.C. (International Electrotechnical Commission). The sensitivity of "Pa" will increase 20 dB compared to the "ubar" indication. Example: -60 dB (0 dB = 1 V/ubar) = -40 dB (1V/Pa)
2. All specifications measured at 5~35°C, humidity at 45~85%, under 86~106 kPa pressure, unless otherwise noted.

SOLDERABILITY

parameter	conditions/description	min	typ	max	units
hand soldering	for 2 ± 0.5 seconds	270	280	290	°C

MECHANICAL DRAWING

units: mm

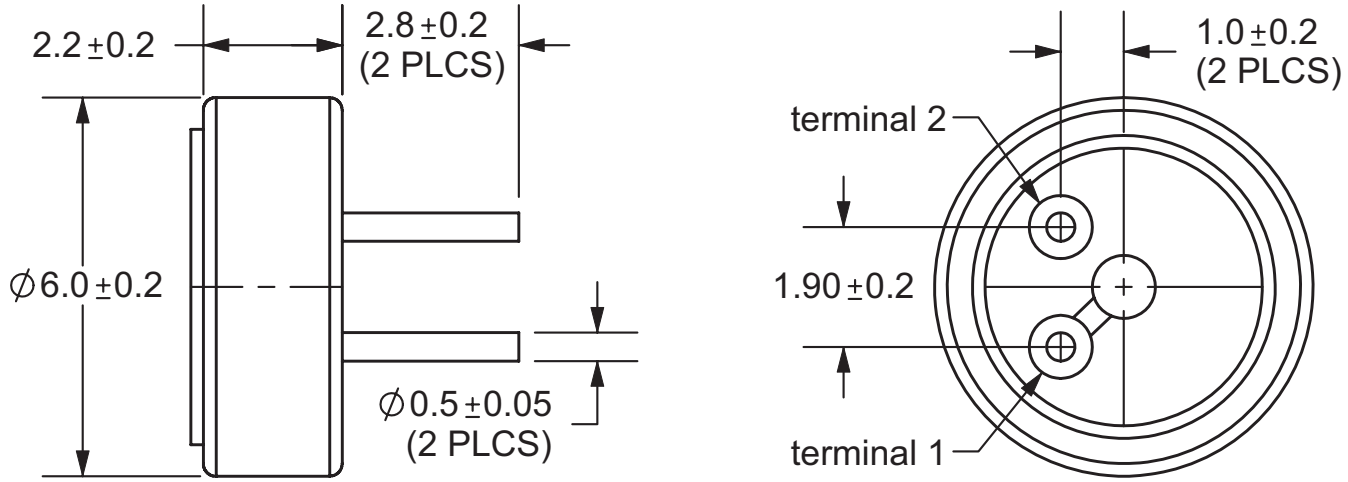

FREQUENCY RESPONSE CURVE

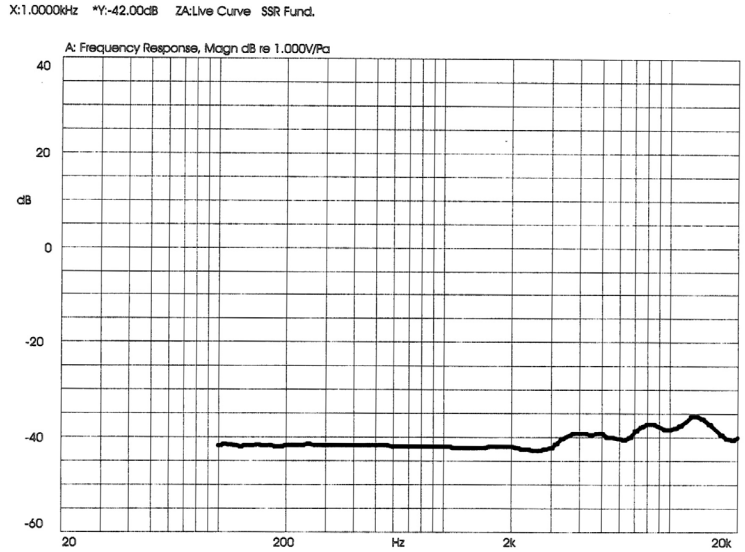

APPLICATION CIRCUIT

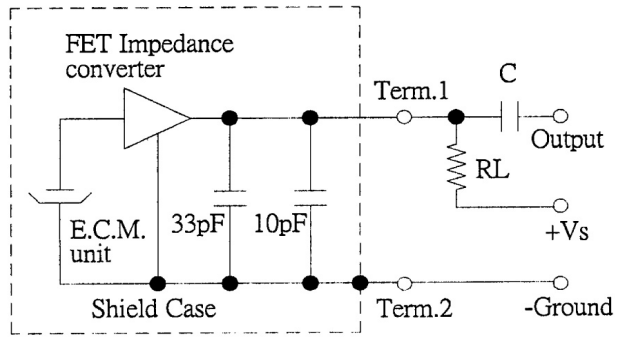

RL = 2.2 kΩ

PACKAGING

units: mm

Inner Box Size: 100 x 100 x 8 mm
Outer Box Size: 230 x 230 x 270 mm
Inner Box QTY: 100 pcs per box
Outer Box QTY: 10,000 pcs per box

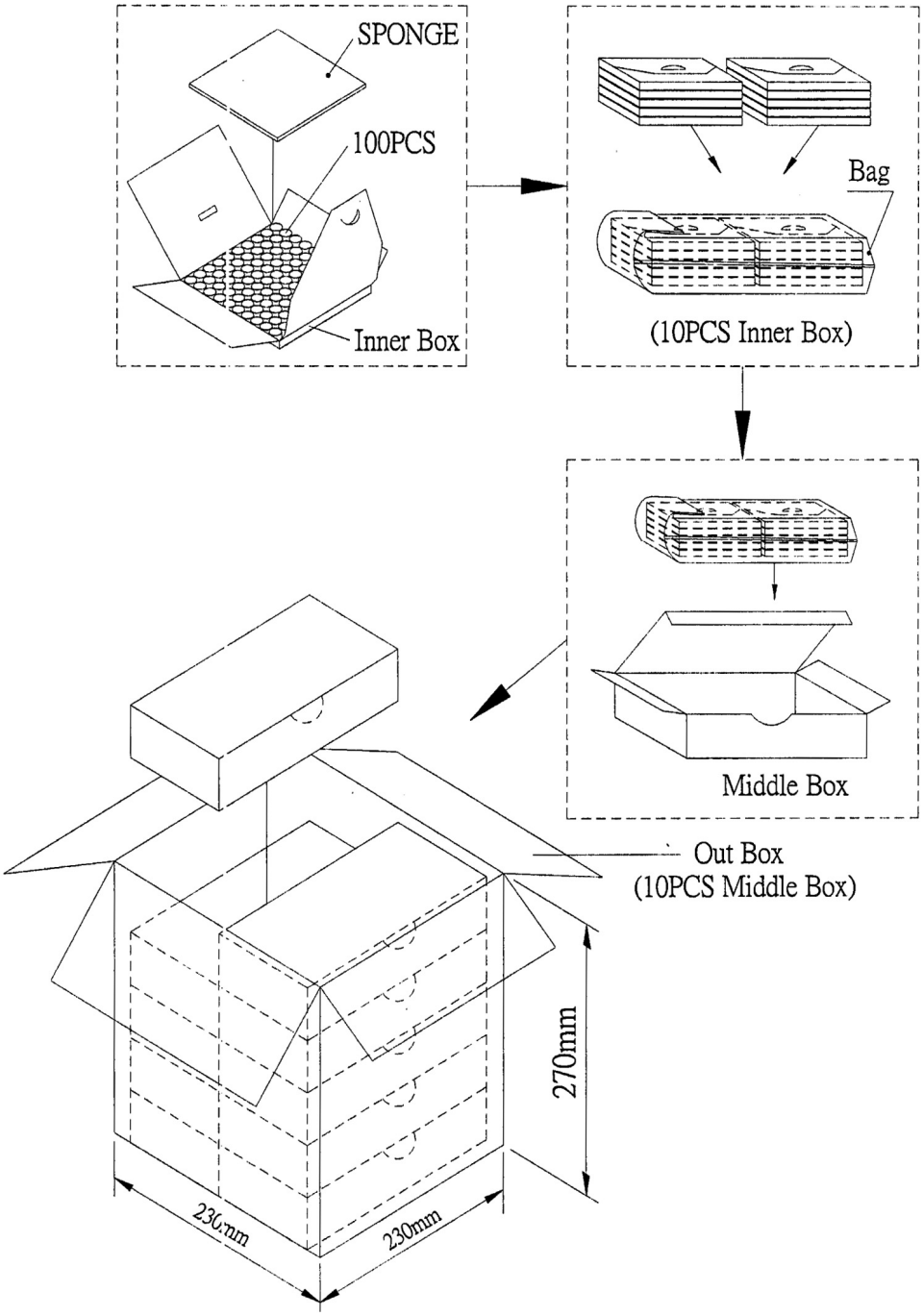

REVISION HISTORY

rev.	description	date
1.0	initial release	06/01/2008
1.01	brand update	04/24/2020
1.02	logo, datasheet style update	08/05/2022

The revision history provided is for informational purposes only and is believed to be accurate.

CUI Devices offers a one (1) year limited warranty. Complete warranty information is listed on our website.

CUI Devices reserves the right to make changes to the product at any time without notice. Information provided by CUI Devices is believed to be accurate and reliable. However, no responsibility is assumed by CUI Devices for its use, nor for any infringements of patents or other rights of third parties which may result from its use.

CUI Devices products are not authorized or warranted for use as critical components in equipment that requires an extremely high level of reliability. A critical component is any component of a life support device or system whose failure to perform can be reasonably expected to cause the failure of the life support device or system, or to affect its safety or effectiveness.