CUI DEVICES

MODEL: PJ-005B | DESCRIPTION: DC POWER JACK

FEATURES
- 2.5 mm center pin
- mounting hardware includes nut and washer
- panel mount

RoHS

SPECIFICATIONS

parameter	conditions/description	min	typ	max	units
rated input voltage			24		Vdc
rated input current				5	A
contact resistance				30	mΩ
insulation resistance	at 500 Vdc	100			MΩ
voltage withstand	at 50/60Hz for 1 minute			500	Vac
insertion/withdrawal force		0.3		3	kg
operating temperature		-40		70	°C
life			5,000		cycles
flammability rating	plastic: UL94V-0 insulator: UL94HB				
RoHS	yes				

SOLDERABILITY

parameter	conditions/description	min	typ	max	units
hand soldering	for 3±0.5 seconds	340	350	360	°C

MECHANICAL DRAWING

units: mm[inches]
tolerance: ±0.3mm

	MATERIAL	PLATING
center pin	brass	nickel
terminal 1	brass	silver
terminal 2	phosphor bronze	silver
terminal 3	brass	silver
bushing	brass	nickel
nut	brass	nickel
washer	steel	nickel
insulator	red vulcanized fiber	
plastic	PBT	

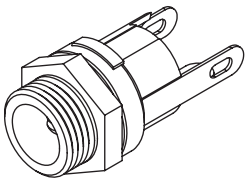

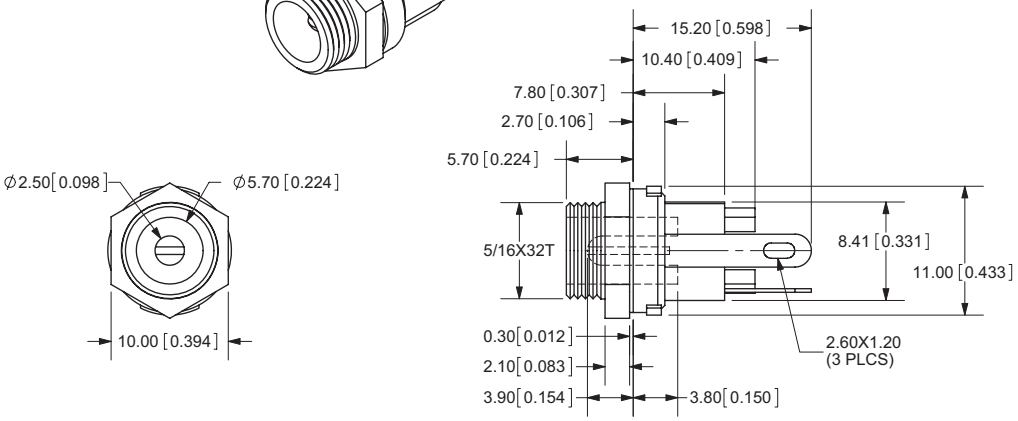

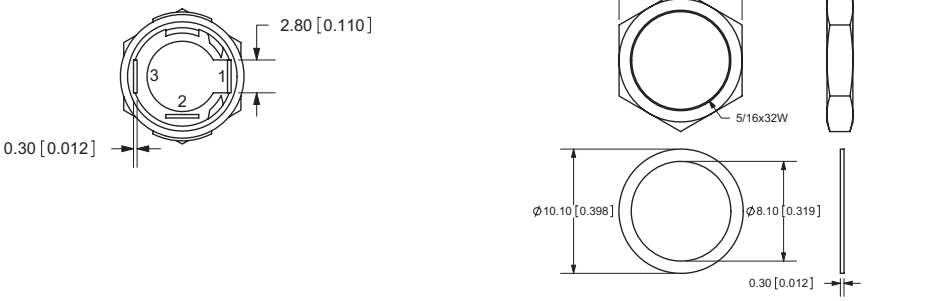

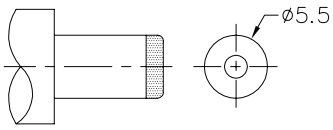

MATING PLUG
Jack Insertion Depth: 9.0 mm

SCHEMATIC	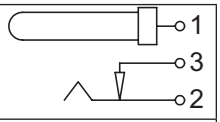
Model	PJ-005B
Center Pin	Ø2.5 mm

Note: 1. All specifications measured at 10~35°C, humidity at 45~85%, under standard atmospheric pressure, unless otherwise noted.

REVISION HISTORY

rev.	description	date
1.0	initial release	01/30/2006
1.01	applied new spec template	05/06/2011
1.02	updated voltage and current rating	07/09/2014
1.03	brand update	10/31/2019
1.04	updated hand soldering recommendations	02/23/2022

The revision history provided is for informational purposes only and is believed to be accurate.

CUI DEVICES

CUI Devices offers a one (1) year limited warranty. Complete warranty information is listed on our website.

CUI Devices reserves the right to make changes to the product at any time without notice. Information provided by CUI Devices is believed to be accurate and reliable. However, no responsibility is assumed by CUI Devices for its use, nor for any infringements of patents or other rights of third parties which may result from its use.

CUI Devices products are not authorized or warranted for use as critical components in equipment that requires an extremely high level of reliability. A critical component is any component of a life support device or system whose failure to perform can be reasonably expected to cause the failure of the life support device or system, or to affect its safety or effectiveness.

cuidevices.com